FLUID-APP
HYDRAULICS

BSPP catalogue

SEPTEMBER 2024

version

CATALOGUE

2024
SEPTEMBER

FLUID-APP
HYDRAULICS

about US

Fluid-app is a player in the hydraulic valves and components market.

A Company with long experience in the field.
Its founders have been working for almost twenty years in the production of hydraulic components **made in Italy** to always offer the best in terms of **quality, reliability and on-time delivery**.

Years and years of consolidated technical and production experience at the service of the customer, also to study and customise products in synergy.

In its plant in Reggio Emilia, in the heart of the Italian hydraulics territory, Fluid-app designs and manufactures a wide range of hydraulic valves and components for many applications: from the agricultural to the earth-moving sector, from building to ecology, from transport to industrial vehicles.

Fluid-App,
the value of experience!

Please read these instructions carefully before installation. All operations must be carried out by specialised and competent personnel.
The user must periodically check the condition and correct functioning of the valves, the corrosion and the condition of the hydraulic installation.

Always respect the technical prescriptions of the valve.

OIL
Use only mineral oil (HL, HLP) according to DIN 51524. The use of other fluids may cause bad working of the valve.

VISCOSITY '
The viscosity of the oil should be in the range of 15 mm2/s to 250mm2/s.
Recommended viscosity ISO VG 46 (for cartridge valves ISO VG 32).

CONTAMINATION AND FILTRATION
Excessive fluid contamination is the main cause of bad-working in hydraulic installations.
Max. contamination with filter ISO 4406:1999 - class 19/17/14

The use of filters is necessary to protect the system from bad-working, in order to avoid serious consequences for the hydraulic installation and people.
Fluid-app recommends a filtration of 15 microns for its valves.

OPERATING TEMPERATURES
Environment temperature: -25°C to +60°C
Oil temperature (with NBR seals): from -25°C to +75°C

POWER SUPPLY
The solenoid valve coils must be supplied with voltages between +/- 10% of the nominal voltage at a maximum environment temperature of 60°C.

SEALING
O-rings mounted on the valves are in NBR
The anti-extrusion rings used to protect the o-rings are made of PTFE or NBR.

TESTING CONDITIONS
All the tests shown in the catalogue were carried out with mineral oil ISO VG 46 at a temperature of 40°C and an absolute filtration degree of 15 microns.

MARKING CODE		
YEAR	**LETTER ASSOCIATED WITH THE YEAR**	**MANUFACT. WEEK**
2021	V	Number of the week. The first week of the year starts with the first Monday
2022	X	
2023	Y	
2024	Z	
2025	A	
2026	B	
2027	C	
2028	D	
2029	E	
2030	F	
2031	G	

Single counterbalance valves

	TYPE	3D	MAX FLOW l/min [USgpm]	MAX PRESSURE bar [PSI]	PORTS	CATALOGUE PAGE
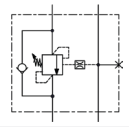	BSA		160 [42,1]	350 [5075]	BSPP (GAS)	24
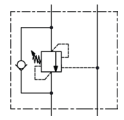	BSAY		60 [15,9]			26
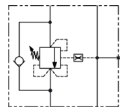	BSCY					28
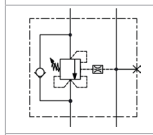	BSC					30
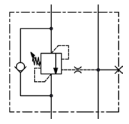	BSI					32
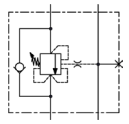	BSL					24
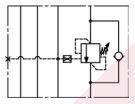	BCG				CETOP3	26
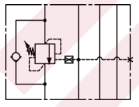	BCE					28
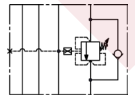	BCH					40
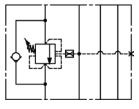	BCF					42

Double counterbalance valves

	TYPE	3D	MAX FLOW l/min [USgpm]	MAX PRESSURE bar [PSI]	PORTS	CATALOGUE PAGE
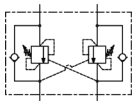	BDA		160 [42,1]	350 [5075]	BSPP (GAS)	44
	BDAY		60 [15,9]			46
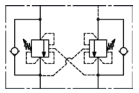	BDCY					48
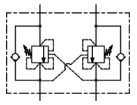	BDC					50
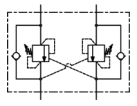	BFA		60 [15,9]	350 [5075]	BSPP (GAS)	52
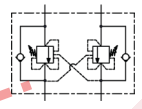	BFC					54
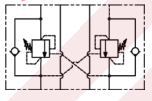	BCA				CETOP3	56
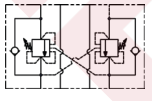	BCC					58

Check valves

	TYPE	3D	MAX FLOW l/min [USgpm]	MAX PRESSURE bar [PSI]	PORTS	CAVITY	CATALOGUE PAGE
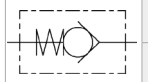	UFC		350 [92,5]	400 [5800]	BSPP (GAS)	/	60
	UMC		50 [13,2]	500 [7250]		/	62
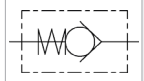	VUC		120 [31,66]	350 [5075]		FC111 FC112 FC113 FC114	64
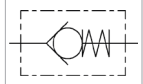	VUD					FC115 FC116 FC117 FC118	66
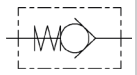	VUS		80 [21]			FC107 FC108 FC109 FC110	68

Unidirectional flow control valves

	TYPE	3D	MAX FLOW l/min [USgpm]	MAX PRESSURE bar [PSI]	PORTS	CATALOGUE PAGE
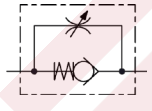	SUA		150 [39,6]	400 [5800]	BSPP (GAS)	86
	SUD		50 [13,2]			88
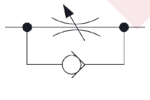	VCU		160 [42,7]	350 [5075]		94

Bidirectional flow control valves

	TYPE	3D	MAX FLOW l/min [USgpm]	MAX PRESSURE bar [PSI]	PORTS	CATALOGUE PAGE
	SBA		150 [39,6]	400 [5800]	BSPP (GAS)	90
	SBD		50 [13,2]	400 [5800]		92
	VCB		70 [18,6]	350 [5075]		96

Flow control valves pressure compensated

	TYPE	3D	MAX FLOW l/min [USgpm]	MAX PRESSURE bar [PSI]	PORTS	CAVITY	CATALOGUE PAGE
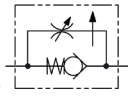	CFR		45 [121]	250 [3625]	BSPP (GAS)	/	84
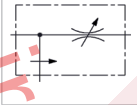	RCT	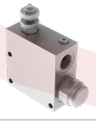	240 [63,4]	210 [3050]		/	98
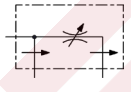	RCP		150 [39,6]	210 [3050]		/	100
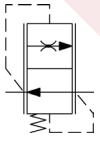	F1B		15 [3,96]	250 [3625]		FC105	70
	F1T						72

	TYPE	3D	MAX FLOW l/min [USgpm]	MAX PRESSURE bar [PSI]	PORTS	CAVITY	CATALOGUE PAGE
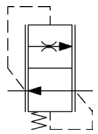	F1E		15 [3,96]	250 [3625]	BSPP (GAS)	FC105	74
	F1C					/	76
	F2B		18 [4,75]			FC106	78

Hose burst

	TYPE	3D	MAX FLOW l/min [USgpm]	MAX PRESSURE bar [PSI]	PORTS	CAVITY	CATALOGUE PAGE
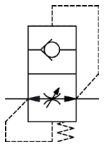	VBA		180 [47,5]	350 [5075]	BSPP (GAS)	FC100 FC101 FC102 FC103 FC104	80
	VBAT		80 [21,1]	320 [4641]		/	82

Shuttle valves

	TYPE	3D	MAX FLOW l/min [USgpm]	MAX PRESSURE bar [PSI]	PORTS	CATALOGUE PAGE
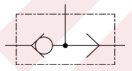	VSS	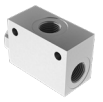	45 [12]	350 [5075]	BSPP (GAS)	120

Flow dividers

	TYPE	3D	MAX FLOW l/min [USgpm]	MAX PRESSURE bar [PSI]	PORTS	CATALOGUE PAGE
	VDF		40 [10,6]	210 [3050]	BSPP (GAS)	132

Relief valves with manifold

	TYPE	3D	MAX FLOW l/min [USgpm]	MAX PRESSURE bar [PSI]	PORTS	CATALOGUE PAGE
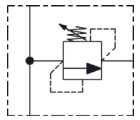	M20B		30 [8]	350 [5075]	BSPP (GAS)	126
	M40B		50 [13,2]			128
	M80B		80 [21,1]			130
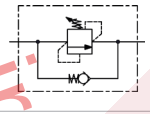	VSD	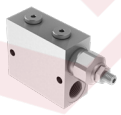	50 [13,2]			122
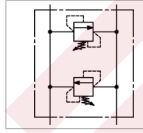	VAA		50 [13,2]			124

Cetop valves

	TYPE	3D	MAX FLOW l/min [USgpm]	MAX PRESSURE bar [PSI]	PORTS	CATALOGUE PAGE
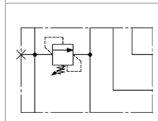	MC3		50 [13,2]	210 [3045]	BSPP (GAS)	134
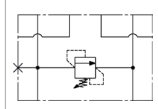	MC5		80 [21,1]			136
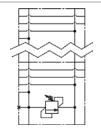	MM		50 [13,2]			138
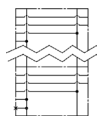	MM		50 [13,2]	210 [3045]	BSPP (GAS)	140

Double pilot check valves

	TYPE	3D	MAX FLOW l/min [USgpm]	MAX PRESSURE bar [PSI]	PORTS	CATALOGUE PAGE
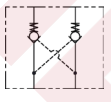	VBD		50 [13,2]	350 [5075]	BSPP (GAS)	102
	VBDT		35 [9,2]			106
	VBDG		35 [9,2]			108
	VPD		60 [15,83]			112
	VPF					114

Single pilot check valves

	TYPE	3D	MAX FLOW l/min [USgpm]	MAX PRESSURE bar [PSI]	PORTS	CATALOGUE PAGE
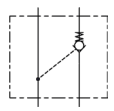	VBS		50 [13,2]	350 [5075]	BSPP (GAS)	104
	VBST		35 [9,2]			110
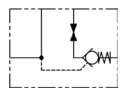	VSP DX		40 [10,52]			116
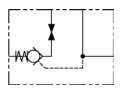	VSP SX					118

High pressure flow diverters

	TYPE	3D	MAX FLOW l/min [USgpm]	MAX PRESSURE bar [PSI]	PORTS	CATALOGUE PAGE
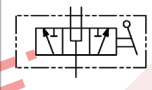	D3HA	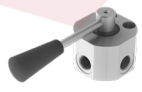	120 [31,7]	500 [7250]	BSPP (GAS)	142
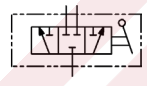	D3HC					
	D6HA					144
	D6HC					

Cartridge valves

	TYPE	3D	MAX FLOW l/min [USgpm]	MAX PRESSURE bar [PSI]	CAVITY	CATALOGUE PAGE
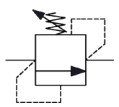	M20		30 [8]	350 [5075]	SAE8/2	148
	M22					150
	M30		50 [13,5]		FC003	152
	M40				FC002	154
	M42				SAE10/2	156
	M80		80 [21,1]		FC005	158
	UC2		35 [9,2]		SAE8/2	160
	UC3		80 [21,13]			162
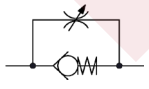	CU2		40 [10,6]			164
	CB2					166

	TYPE	3D	MAX FLOW l/min [USgpm]	MAX PRESSURE bar [PSI]	CAVITY	CATALOGUE PAGE
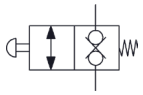	VM2		30 [7,92]	350 [5075]	SAE8/2	168
	PM2		2 cm^3 [0,12 in^3]	200 [2900]		170
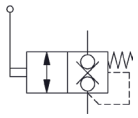	VC2		30 [7,9]	350 [5075]		172
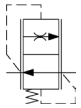	DC2		12 [3,17]	250 [3625]		174
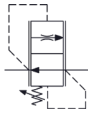	DR2		35 [9,25]	350 [5075]		176
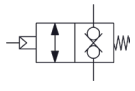	VP2		30 [7,92]	350 [5075]		178
	VBC		50 [13,5]		FC004	180
	VDF3		40 [10,6]		SAE10/4	182

Solenoid valves

	TYPE	3D	MAX FLOW l/min [USgpm]	MAX PRESSURE bar [PSI]	CAVITY	CATALOGUE PAGE
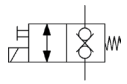	E2F28E		22 [5,8]	210 [3045]	SAE8/2	186
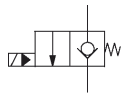	E2S20C		40 [10,6]	350 [5075]		188
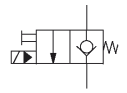	E2S20E					
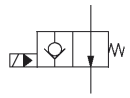	E2S20A					
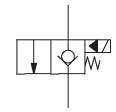	E2L20C		30 [7,92]	300 [4350]		190
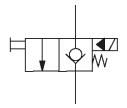	E2L20E					
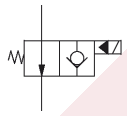	E2L20A					
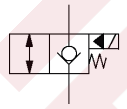	E2S22C		40 [10,6]	350 [5076]		192
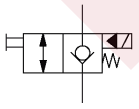	E2S22E					
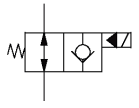	E2S22A					

	TYPE	3D	MAX FLOW l/min [USgpm]	MAX PRESSURE bar [PSI]	CAVITY	CATALOGUE PAGE
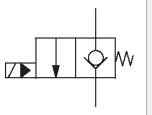	E2S24C		40 [10,6]	350 [5076]	SAE8/2	194
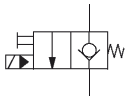	E2S24E					
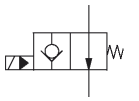	E2S24A					
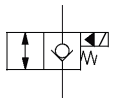	E2S26C					196
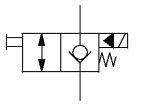	E2S26E					
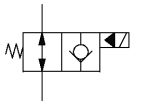	E2S26A					
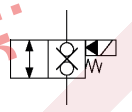	E2S28C					198
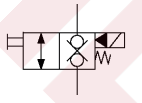	E2S28E					
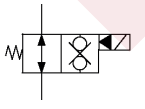	E2S28A					

	TYPE	3D	MAX FLOW l/min [USgpm]	MAX PRESSURE bar [PSI]	CAVITY	CATALOGUE PAGE
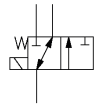	E6S30A		12 [3,2]	210 [3045]	SAE8/3	200
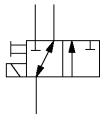	E6S30E					
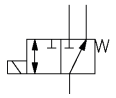	E6S31A					202
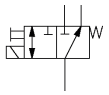	E6S31E					
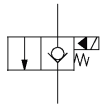	E3S20C		70 [18,7]	350 [5076]	SAE10/2	204
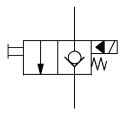	E3S20E					
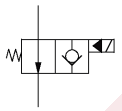	E3S20A					
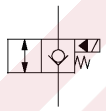	E3S22C					206
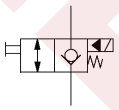	E3S22E					
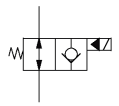	E3S22A					

	TYPE	3D	MAX FLOW l/min [USgpm]	MAX PRESSURE bar [PSI]	CAVITY	CATALOGUE PAGE
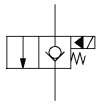	E3S24C		70 [18,7]	350 [5076]	SAE10/2	208
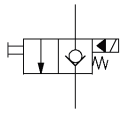	E3S24E					
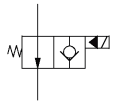	E3S24A					
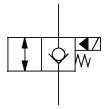	E3S26C					210
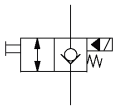	E3S26E					
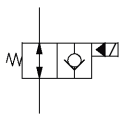	E3S26A					
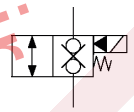	E3S28C					212
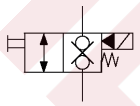	E3S28E					
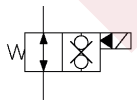	E3S28A					

	TYPE	3D	MAX FLOW l/min [USgpm]	MAX PRESSURE bar [PSI]	CAVITY	CATALOGUE PAGE
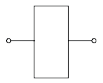	**C22**		/	/	/	214
	CNS		/	/	/	216
	MANIFOLDS		/	/	/	218

in-line
VALVES

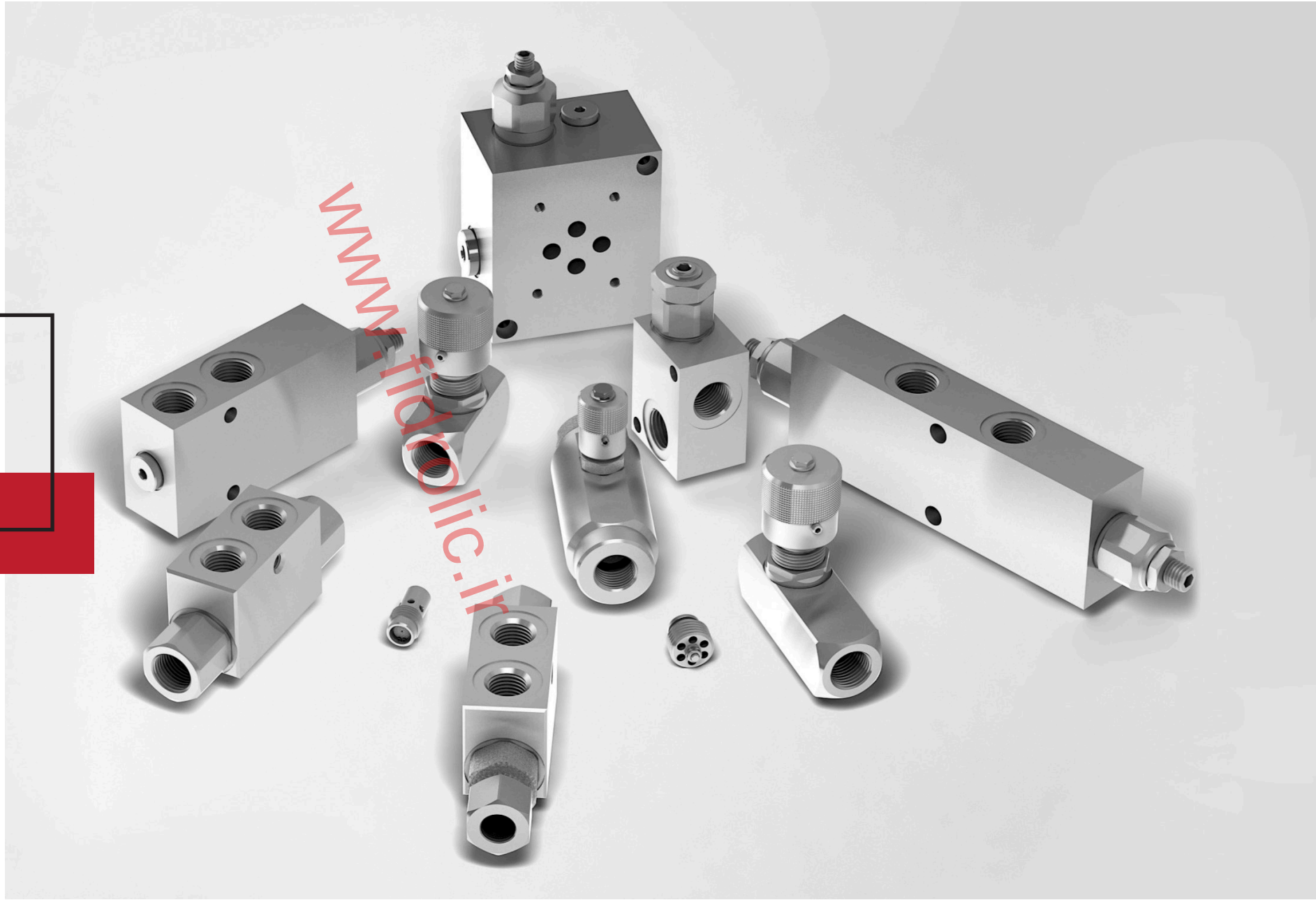

BSA COUNTERBALANCE BSPP

SINGLE COUNTERBALANCE VALVES FOR OPEN CENTER

BSA counterbalance valves (Gas thread) are used to keep a load locked, the built-in relief valve protects the system from overpressure in the cylinder by draining the oil.

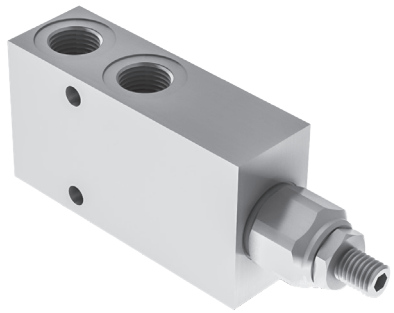

HYDRAULIC CIRCUIT

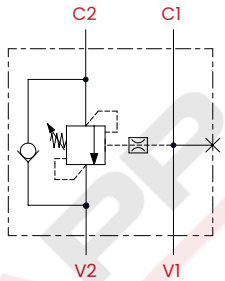

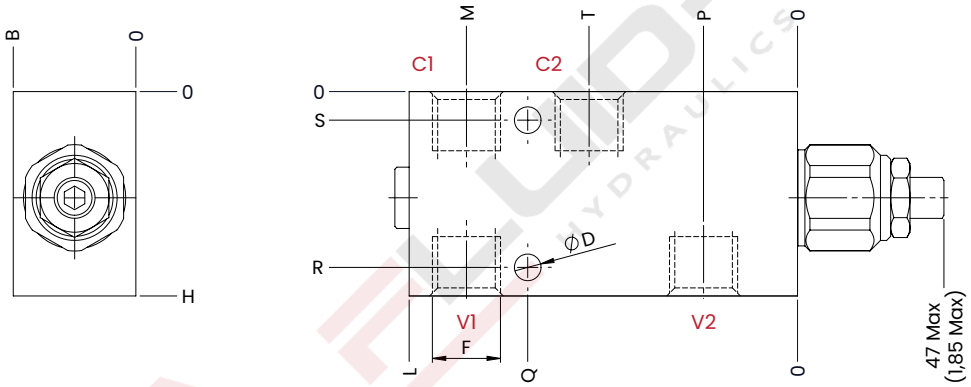

PERFORMANCES

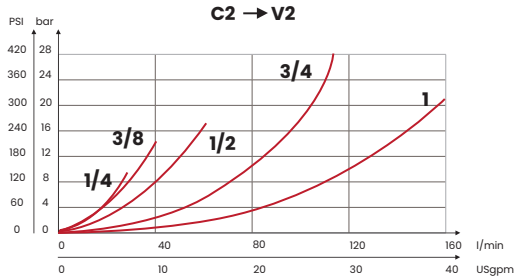

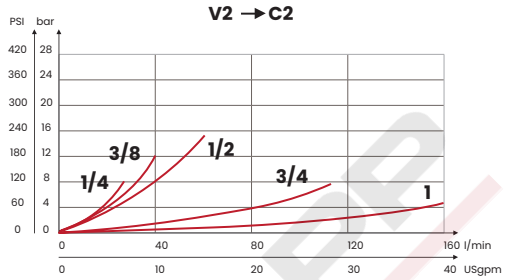

TAMPER PROOF CAP M10

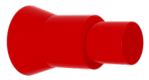

CODE
62200021

ORDERING CODE

CODE	TYPE	F ports	MAX FLOW l/min [USgpm]	MAX PRESSURE bar [PSI]	STANDARD SETTING bar [PSI]	RANGE SPRING bar [PSI]	INCREASE TO TURN bar [PSI]	PILOT RATIO	WEIGHT kg [lb]
FA1001	BSA1B21	1/4 BSPP	30 [7,9]	350 [5075]	210 [3045]	30/210 [435/3045]	80 [1160]	1:4,25 On request 1:8,1	1,10 [2,42]
FA1002	BSA1B35				350 [5075]	60/350 [870/5075]	135 [1960]		
FA1003	BSA2B21	3/8 BSPP	40 [10,6]		210 [3045]	30/210 [435/3045]	80 [1160]		1,05 [2,31]
FA1004	BSA2B35				350 [5075]	60/350 [870/5075]	135 [1960]		
FA1005	BSA3B21	1/2 BSPP	60 [15,9]		210 [3045]	30/210 [435/3045]	80 [1160]		1,25 [2,76]
FA1006	BSA3B35				350 [5075]	60/350 [870/5075]	135 [1960]		
FA1007	BSA4B21	3/4 BSPP	110 [4,33]		210 [3045]	30/210 [435/3045]	70 [966]	1:6,2 On request 1:10,6	2,7 [6]
FA1008	BSA4B35				350 [5075]	60/350 [870/5075]	145 [2100]		
FA1009	BSA5B21	1 BSPP	160 [6,29]		210 [3045]	30/210 [435/3045]	70 [966]		4,7 [10,3]
FA1010	BSA5B35				350 [5075]	60/350 [870/5075]	145 [2100]		

Standard setting 350 bar [5075 PSI] **to 5 l/m** [1,32 USgpm] **Standard setting 210 bar** [3045 PSI] **to 5 l/m** [1,32 USgpm]

TECHNICAL CHARACTERISTICS

mm [Inches]

F	H	B	ØD	L	M	P	Q	R	S	T
1/4 BSPP	50 [1,97]	30 [1,18]	6,5 [0,26]	95 [3,74]	81 [3,19]	23 [0,91]	66 [2,60]	43 [1,70]	7 [0,28]	51 [2,01]
3/8 BSPP										
1/2 BSPP	60 [2,36]			100 [3,94]	84 [3,31]	21 [0,83]	67,5 [2,66]	50 [1,97]	10 [0,39]	
3/4 BSPP	70 [2,75]	40 [1,57]	10,5 [0,41]	140 [5,51]	120 [4,72]	26 [1,02]	95,5 [3,75]	60 [2,36]		71 [2,79]
1 BSPP	80 [3,15]	50 [1,97]		145 [5,71]	121 [4,76]		96 [3,78]	70 [2,75]		
Steel body (on request aluminium body - stainless steel AISI 316L body)										

UPDATE Sept. 2024 (v.07)

Mineral oil: DIN 51524 ISO 6743/4 | Oil viscosity: 15 to 250 cSt 15-250 mm2/s | Oil temperature: -4°F + 176°F -20°C +80°C | Ambient temperature: -4°F + 122°F -20°C +50°C | Max contamination index with filter: 5 to 250 cSt 15-250 mm2/s | It is necessary a filter use to protect the valve (advised filtration 15 µm) | Max leakage: 0,25 cm3/min - 5 drops/min at 80% of the calibration pressure

Via Guadiana n° 8/1, 42124 Reggio Emilia - ITALY | www.fluid-app.it | sales@fluid-app.it

BSAY COUNTERBALANCE BSPP

SINGLE COUNTERBALANCE VALVES FOR OPEN CENTER

BSAY counterbalance valves (Gas thread) are used to keep a load locked, the built-in relief valve protects the system from overpressure in the cylinder by draining the oil.

HYDRAULIC CIRCUIT

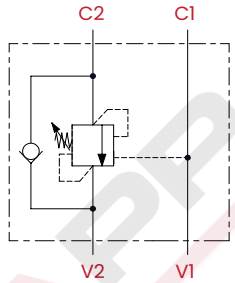

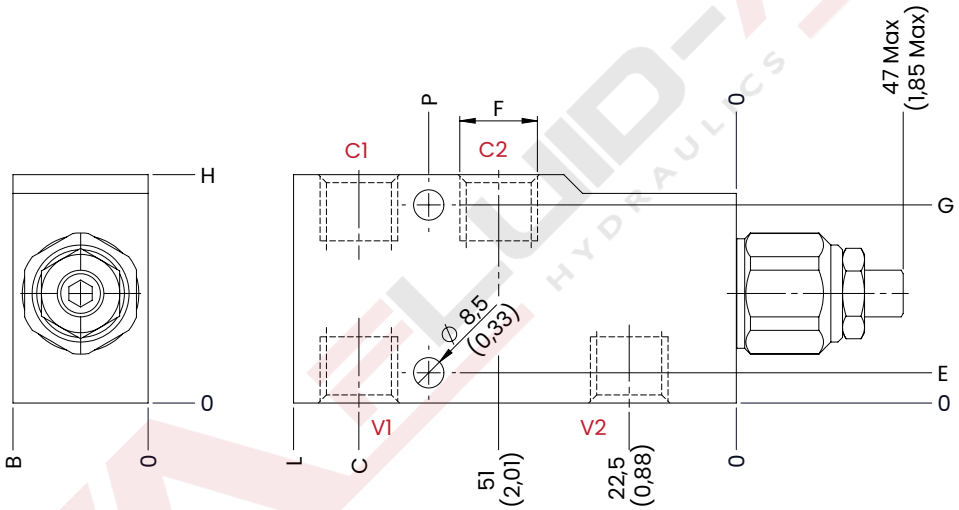

PERFORMANCES

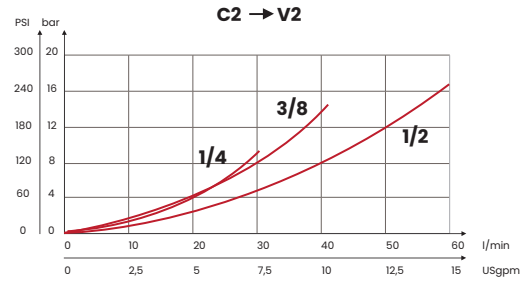

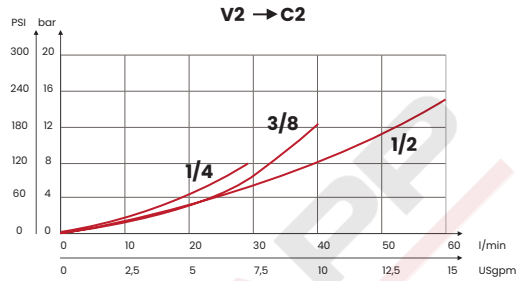

TAMPER PROOF CAP M10

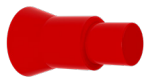

CODE
62200021

ORDERING CODE

CODE	TYPE	F ports	MAX FLOW l/min [USgpm]	MAX PRESSURE bar [PSI]	STANDARD SETTING bar [PSI]	RANGE SPRING bar [PSI]	INCREASE TO TURN bar [PSI]	PILOT RATIO	WEIGHT kg [lb]
FA1013	BSA1B21YA	1/4 BSPP	30 [7,9]	350 [5075]	210 [3045]	30/210 [435/3045]	80 [1160]	1:4,25	1,05 [2,3]
FA1014	BSA1B35YA				350 [5075]	60/350 [870/5075]	135 [1960]		
FA1015	BSA2B21YA	3/8 BSPP	40 [10,6]		210 [3045]	30/210 [435/3045]	80 [1160]		1 [2,2]
FA1016	BSA2B35YA				350 [5075]	60/350 [870/5075]	135 [1960]		
FA1017	BSA3B21YA	1/2 BSPP	60 [15,9]		210 [3045]	30/210 [435/3045]	80 [1160]		1,2 [2,65]
FA1018	BSA3B35YA				350 [5075]	60/350 [870/5075]	135 [1960]		

Standard setting 350 bar [5075 PSI] **to 5 l/m** [1,32 USgpm] **Standard setting 210 bar** [3045 PSI] **to 5 l/m** [1,32 USgpm]

TECHNICAL CHARACTERISTICS

mm [Inches]

F	B	H	L	P	C	E	G
1/4 BSPP	25 [0,98]	50 [1,97]	95 [3,74]	66 [2,26]	81 [3,19]	5,5 [0,22]	44,5 [1,73]
3/8 BSPP							
1/2 BSPP	30 [1,18]	60 [2,36]	105 [4,13]	70 [2,76]	89 [3,19]	8,5 [0,33]	51,5 [2,03]
Steel body							

UPDATE. March 2023 (v.04)

Mineral oil: DIN 51524 ISO 6743/4 | Oil viscosity: 15 to 250 cSt 15-250 mm2/s | Oil temperature: -4°F + 176°F -20°C +80°C | Ambient temperature: -4°F + 122°F -20°C +50°C | Max contamination index with filter: 5 to 250 cSt 15-250 mm2/s | It is necessary a filter use to protect the valve (advised filtration 15 µm) | Max leakage: 0,25 cm3/min - 5 drops/min at 80% of the calibration pressure

Via Guadiana n° 8/1, 42124 Reggio Emilia - ITALY | www.fluid-app.it | sales@fluid-app.it

BSCY COUNTERBALANCE BSPP

SINGLE COUNTERBALANCE VALVES FOR CLOSED CENTER

BSCY counterbalance valves (Gas thread) are used to keep a load locked, the built-in relief valve protects the system from overpressure in the cylinder by draining the oil.

HYDRAULIC CIRCUIT

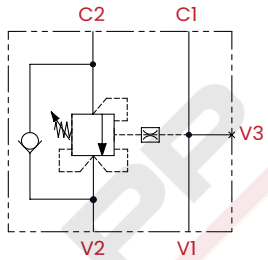

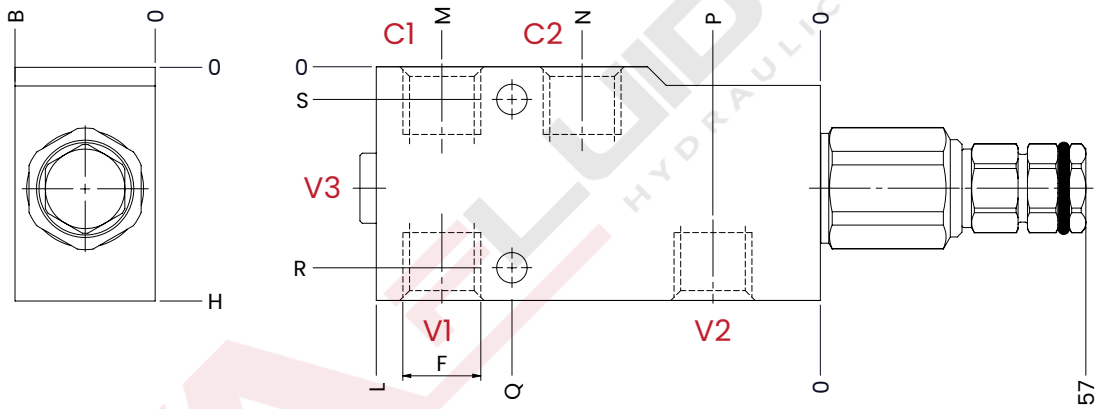

PERFORMANCES

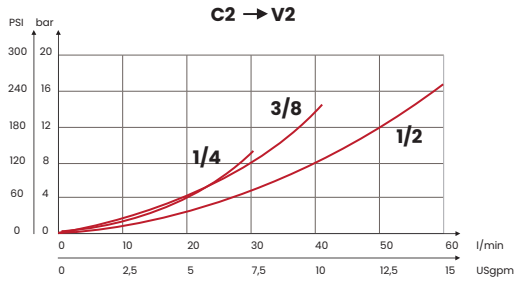

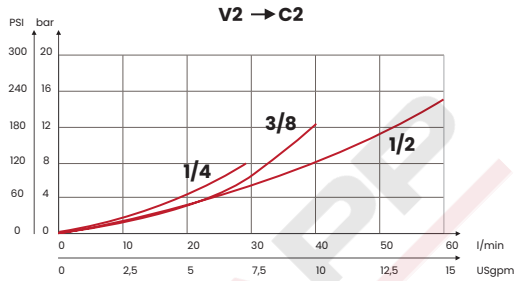

TECHNICAL CHARACTERISTICS

mm [Inches]

F	B	H	L	P	C	E	G
1/4 BSPP	25 [0,98]	50 [1,97]	95 [3,74]	66 [2,26]	81 [3,19]	5,5 [0,22]	44,5 [1,73]
3/8 BSPP							
1/2 BSPP	30 [1,18]	60 [2,36]	105 [4,13]	70 [2,76]	89 [3,19]	8,5 [0,33]	51,5 [2,03]
Steel body							

ORDERING CODE

CODE	TYPE	F ports	MAX FLOW l/min [USgpm]	MAX PRESSURE bar [PSI]	STANDARD SETTING bar [PSI]	RANGE SPRING bar [PSI]	INCREASE TO TURN bar [PSI]	PILOT RATIO	WEIGHT kg [lb]
FA1118	BSC1B21YA	1/4 BSPP	30 [7,9]	350 [5075]	210 [3045]	30/210 [435/3045]	80 [1160]	1:4,25	1,05 [2,3]
FA1119	BSC1B35YA				350 [5075]	60/350 [870/5075]	135 [1960]		
FA1120	BSC2B21YA	3/8 BSPP	40 [10,6]		210 [3045]	30/210 [435/3045]	80 [1160]		1 [2,2]
FA1121	BSC2B35YA				350 [5075]	60/350 [870/5075]	135 [1960]		
FA1122	BSC3B21YA	1/2 BSPP	60 [15,9]		210 [3045]	30/210 [435/3045]	80 [1160]		1,2 [2,65]
FA1123	BSC3B35YA				350 [5075]	60/350 [870/5075]	135 [1960]		

Standard setting 350 bar [5075 PSI] **to 5 l/m** [1,32 USgpm] **Standard setting 210 bar** [3045 PSI] **to 5 l/m** [1,32 USgpm]

UPDATE. Sept. 2024 (v.01)

Mineral oil: DIN 51524 ISO 6743/4 | Oil viscosity: 15 to 250 cSt 15-250 mm2/s | Oil temperature: -4°F + 176°F -20°C +80°C | Ambient temperature: -4°F + 122°F -20°C +50°C | Max contamination index with filter: 5 to 250 cSt 15-250 mm2/s | It is necessary a filter use to protect the valve (advised filtration 15 µm) | Max leakage: 0,25 cm3/min - 5 drops/min at 80% of the calibration pressure

Via Guadiana n° 8/1, 42124 Reggio Emilia - ITALY | www.fluid-app.it | sales@fluid-app.it

BSC COUNTERBALANCE BSPP

SINGLE COUNTERBALANCE VALVES FOR CLOSED CENTER

BSC counterbalance valves (Gas thread) are used to keep a load locked, the built-in relief valve protects the system from overpressure in the cylinder by draining the oil.

HYDRAULIC CIRCUIT

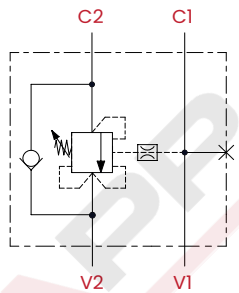

TECHNICAL CHARACTERISTICS

mm [Inches]

F	H	L	M	P	Q	R	S
1/4 BSPP	50 [1,97]	95 [3,74]	81 [3,19]	23 [0,91]	66 [2,60]	43 [1,70]	7 [0,28]
3/8 BSPP							
1/2 BSPP	60 [2,36]	100 [3,94]	84 [3,31]	21 [0,83]	67,5 [2,66]	50 [1,97]	10 [0,39]
Steel body (on request aluminium body)							

PERFORMANCES

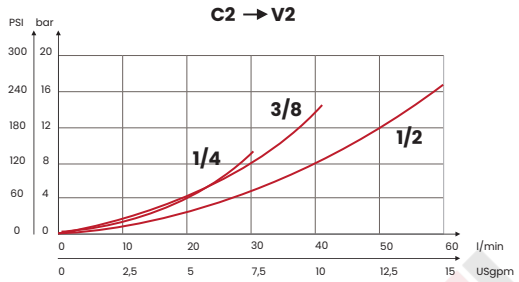

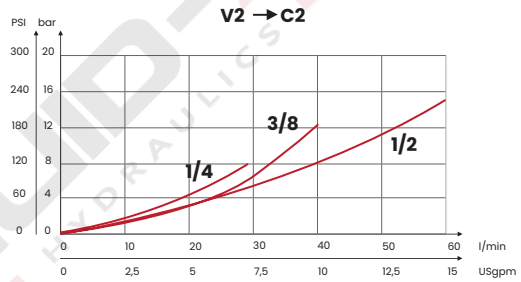

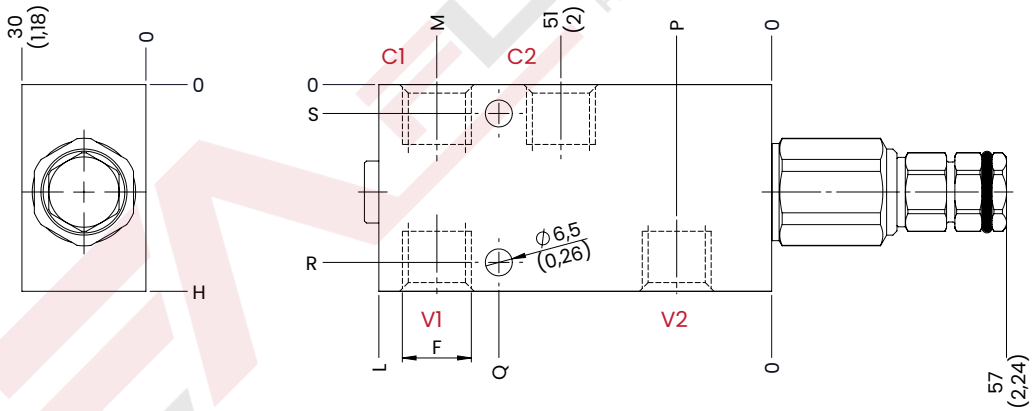

ORDERING CODE

CODE	TYPE	F ports	MAX FLOW l/min [USgpm]	MAX PRESSURE bar [PSI]	STANDARD SETTING bar [PSI]	RANGE SPRING bar [PSI]	INCREASE TO TURN bar [PSI]	PILOT RATIO	WEIGHT kg [lb]
FA1019	BSC1B21	1/4 BSPP	30 [7,9]	350 [5075]	210 [3045]	30/210 [435/3045]	80 [1160]	1:4,25 On request 1:8,1	1,15 [2,53]
FA1020	BSC1B35				350 [5075]	60/350 [870/5075]	135 [1960]		
FA1021	BSC2B21	3/8 BSPP	40 [10,6]		210 [3045]	30/210 [435/3045]	80 [1160]		1,10 [2,42]
FA1022	BSC2B35				350 [5075]	60/350 [870/5075]	135 [1960]		
FA1023	BSC3B21	1/2 BSPP	60 [15,9]		210 [3045]	30/210 [435/3045]	80 [1160]		1,28 [2,84]
FA1024	BSC3B35				350 [5075]	60/350 [870/5075]	135 [1960]		
Standard setting 350 bar [5075 PSI] **to 5 l/m** [1,32 USgpm]					**Standard setting 210 bar** [3045 PSI] **to 5 l/m** [1,32 USgpm]				

UPDATE. August 2023 (v.05)

Mineral oil: DIN 51524 ISO 6743/4 | Oil viscosity: 15 to 250 cSt 15-250 mm2/s | Oil temperature: -4°F + 176°F -20°C +80°C | Ambient temperature: -4°F + 122°F -20°C +50°C | Max contamination index with filter: 5 to 250 cSt 15-250 mm2/s | It is necessary a filter use to protect the valve (advised filtration 15 µm) | Max leakage: 0,25 cm3/min - 5 drops/min at 80% of the calibration pressure

Via Guadiana n° 8/1, 42124 Reggio Emilia - ITALY | www.fluid-app.it | sales@fluid-app.it

BSI COUNTERBALANCE BSPP

SINGLE COUNTERBALANCE VALVES FOR OPEN CENTER - SINGLE FLANGED VERSION

The BSI counterbalance valves (Gas thread) allow you to keep a load locked, the built-in relief valve protects the system from overpressure in the cylinder by sending the oil to drain.

HYDRAULIC CIRCUIT

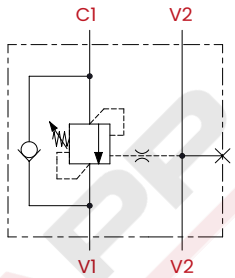

PERFORMANCES

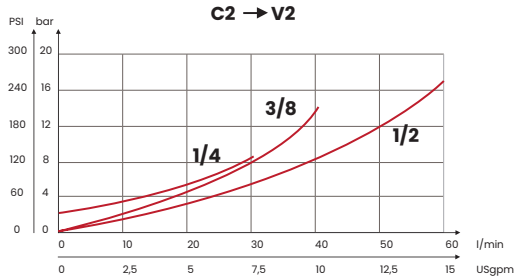

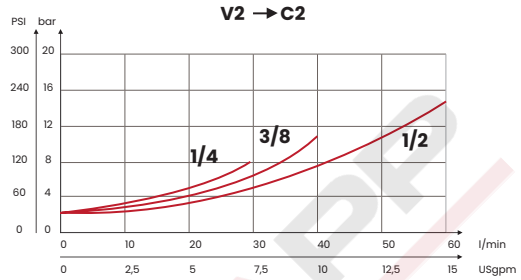

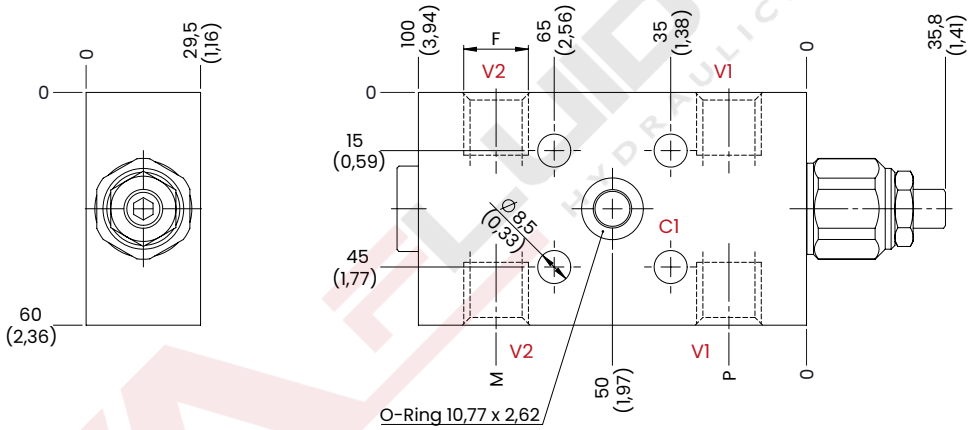

TAMPER PROOF CAP M10

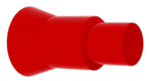

CODE
62200021

ORDERING CODE

CODE	TYPE	F ports	MAX FLOW l/min [USgpm]	MAX PRESSURE bar [PSI]	STANDARD SETTING bar [PSI]	RANGE SPRING bar [PSI]	INCREASE TO TURN bar [PSI]	PILOT RATIO	WEIGHT kg [lb]
FA1027	BSI1B21	1/4 BSPP	30 [7,9]	350 [5075]	210 [3045]	30/210 [435/3045]	80 [1160]	1:4,25 On request 1:8,1	1,30 [2,9]
FA1028	BSI1B35				350 [5075]	60/350 [870/5075]	135 [1960]		
FA1029	BSI2B21	3/8 BSPP	40 [10,6]		210 [3045]	30/210 [435/3045]	80 [1160]		1,25 [0,75]
FA1030	BSI2B35				350 [5075]	60/350 [870/5075]	135 [1960]		
FA1031	BSI3B21	1/2 BSPP	60 [15,9]		210 [3045]	30/210 [435/3045]	80 [1160]		1,65 [3,63]
FA1032	BSI3B35				350 [5075]	60/350 [870/5075]	135 [1960]		

Standard setting 350 bar [5075 PSI] **to 5 l/m** [1,32 USgpm] **Standard setting 210 bar** [3045 PSI] **to 5 l/m** [1,32 USgpm]

TECHNICAL CHARACTERISTICS

mm [Inches]

F	M	P
1/4 BSPP	80 [3,15]	20 [0,78]
3/8 BSPP		
1/2 BSPP	82,5 [3,25]	17,5 [0,69]
Steel body (on request aluminium body)		

Mineral oil: DIN 51524 ISO 6743/4 | Oil viscosity: 15 to 250 cSt 15-250 mm2/s | Oil temperature: -4°F + 176°F -20°C +80°C | Ambient temperature: -4°F + 122°F -20°C +50°C | Max contamination index with filter: 5 to 250 cSt 15-250 mm2/s | It is necessary a filter use to protect the valve (advised filtration 15 µm) | Max leakage: 0,25 cm3/min - 5 drops/min at 80% of the calibration pressure

UPDATE. Sept. 2024 (v.03)

Via Guadiana n° 8/1, 42124 Reggio Emilia - ITALY | www.fluid-app.it | sales@fluid-app.it

BSL COUNTERBALANCE BSPP

SINGLE COUNTERBALANCE VALVES FOR CLOSED CENTER - SINGLE FLANGED VERSION

The BSL counterbalance valves (Gas thread) allow you to keep a load locked, the built-in relief valve protects the system from overpressure in the cylinder by sending the oil to drain.

HYDRAULIC CIRCUIT

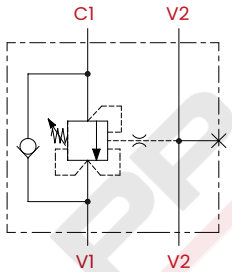

TECHNICAL CHARACTERISTICS

mm [Inches]

F	M	P
1/4 BSPP	80 [3,15]	20 [0,78]
3/8 BSPP		
1/2 BSPP	82,5 [3,25]	17,5 [0,69]
Steel body (on request aluminium body)		

PERFORMANCES

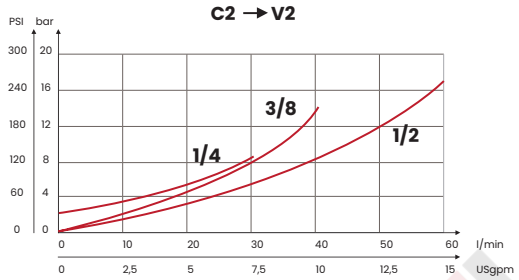

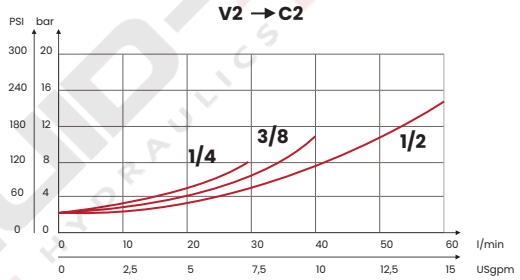

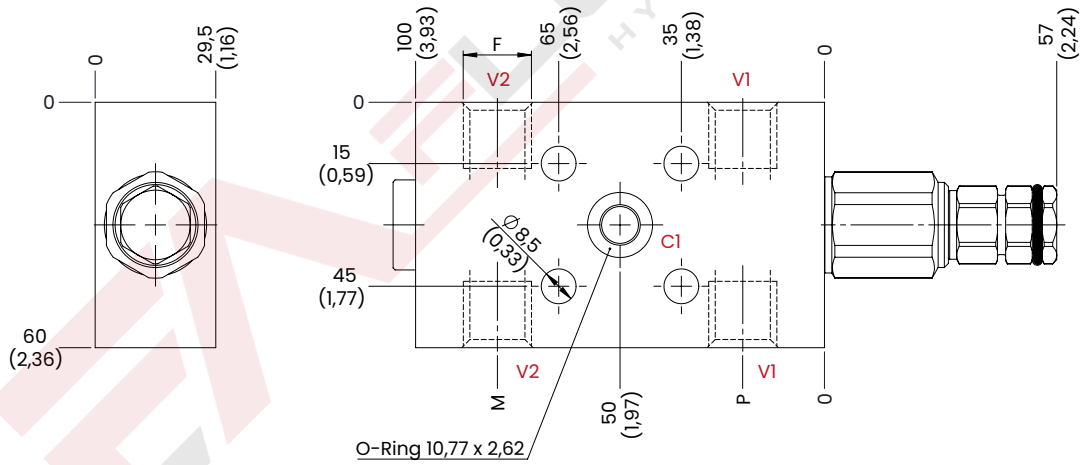

ORDERING CODE

CODE	TYPE	F ports	MAX FLOW l/min [USgpm]	MAX PRESSURE bar [PSI]	STANDARD SETTING bar [PSI]	RANGE SPRING bar [PSI]	INCREASE TO TURN bar [PSI]	PILOT RATIO	WEIGHT kg [lb]
FA1033	BSL1B21	1/4 BSPP	30 [7,9]	350 [5075]	210 [3045]	30/210 [435/3045]	80 [1160]	1:4,25 On request 1:8,1	1,36 [3]
FA1034	BSL1B35				350 [5075]	60/350 [870/5075]	135 [1960]		
FA1035	BSL2B21	3/8 BSPP	40 [10,6]		210 [3045]	30/210 [435/3045]	80 [1160]		1,30 [2,86]
FA1036	BSL2B35				350 [5075]	60/350 [870/5075]	135 [1960]		
FA1037	BSL3B21	1/2 BSPP	60 [15,9]		210 [3045]	30/210 [435/3045]	80 [1160]		1,70 [3,74]
FA1038	BSL3B35				350 [5075]	60/350 [870/5075]	135 [1960]		

Standard setting 350 bar [5075 PSI] **to 5 l/m** [1,32 USgpm] **Standard setting 210 bar** [3045 PSI] **to 5 l/m** [1,32 USgpm]

UPDATE. Sept. 2024 (v.03)

Mineral oil: DIN 51524 ISO 6743/4 | Oil viscosity: 15 to 250 cSt 15-250 mm2/s | Oil temperature: -4°F + 176°F -20°C +80°C | Ambient temperature: -4°F + 122°F -20°C +50°C | Max contamination index with filter: 5 to 250 cSt 15-250 mm2/s | It is necessary a filter use to protect the valve (advised filtration 15 µm) | Max leakage: 0,25 cm3/min - 5 drops/min at 80% of the calibration pressure

Via Guadiana n° 8/1, 42124 Reggio Emilia - ITALY | www.fluid-app.it | sales@fluid-app.it

BCG COUNTERBALANCE CETOP3 "A"

SINGLE COUNTERBALANCE VALVES - CETOP 3 (A) FOR OPEN CENTER

Counterbalance valves are used to keep a load locked, the built-in relief valve protects the system from overpressure in the cylinder by draining the oil.

HYDRAULIC CIRCUIT

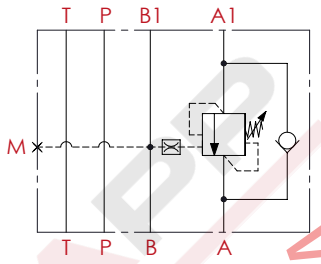

PERFORMANCES

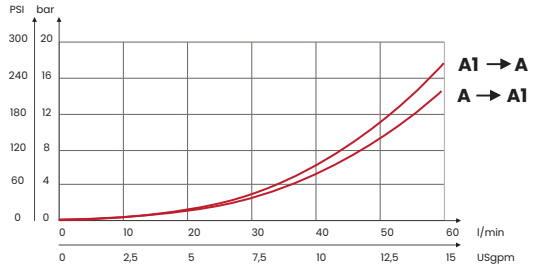

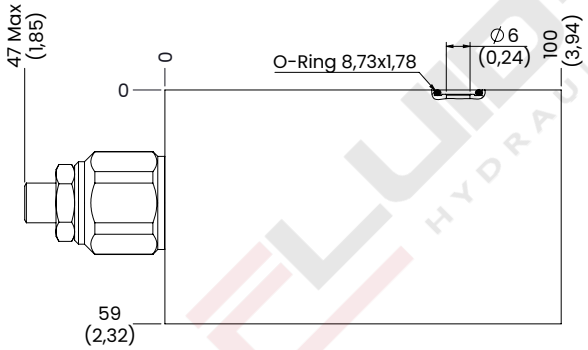

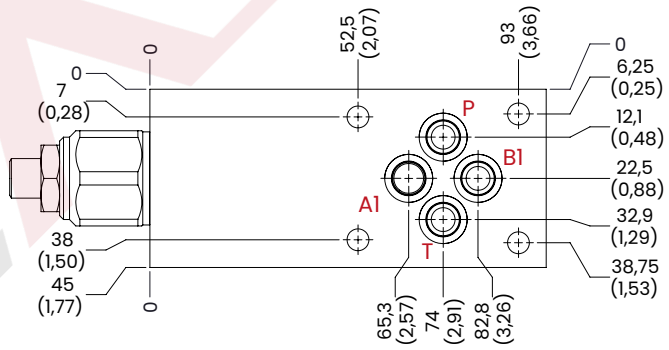

mm [Inches]

TAMPER PROOF CAP M10

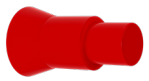

CODE
62200021

ORDERING CODE

CODE	TYPE	F ports	MAX FLOW l/min [USgpm]	MAX PRESSURE bar [PSI]	STANDARD SETTING bar [PSI]	RANGE SPRING bar [PSI]	INCREASE TO TURN bar [PSI]	PILOT RATIO	WEIGHT kg [lb]
FA1106	BCG3C21	CETOP 3	60 [15,99]	350 [5075]	210 [3045]	30/210 [435/3045]	80 [1160]	1:4,25	2,03 [4,46]
FA1107	BCG3C35				350 [5075]	60/350 [870/5075]	135 [1960]	On request 1:8,1	
Standard setting 350 bar [5075 PSI] **to 5 l/m** [1,32 USgpm]					**Standard setting 210 bar** [3045 PSI] **to 5 l/m** [1,32 USgpm]				
Steel body (on request aluminium body)									

UPDATE. Mar. 2024 (v.03)

Mineral oil: DIN 51524 ISO 6743/4 | Oil viscosity: 15 to 250 cSt 15-250 mm2/s | Oil temperature: -4°F + 176°F -20°C +80°C | Ambient temperature: -4°F + 122°F -20°C +50°C | Max contamination index with filter: 5 to 250 cSt 15-250 mm2/s | It is necessary a filter use to protect the valve (advised filtration 15 µm) | Max leakage: 0,25 cm3/min - 5 drops/min at 80% of the calibration pressure

Via Guadiana n° 8/1, 42124 Reggio Emilia - ITALY | www.fluid-app.it | sales@fluid-app.it

BCE COUNTERBALANCE CETOP3 "B"

SINGLE COUNTERBALANCE VALVES - CETOP 3 (B) FOR OPEN CENTER

Counterbalance valves are used to keep a load locked, the built-in relief valve protects the system from overpressure in the cylinder by draining the oil.

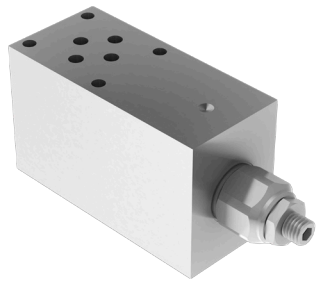

HYDRAULIC CIRCUIT

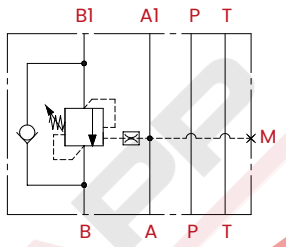

PERFORMANCES

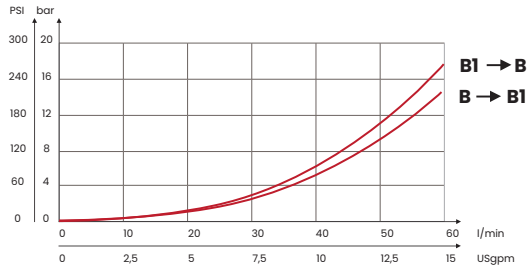

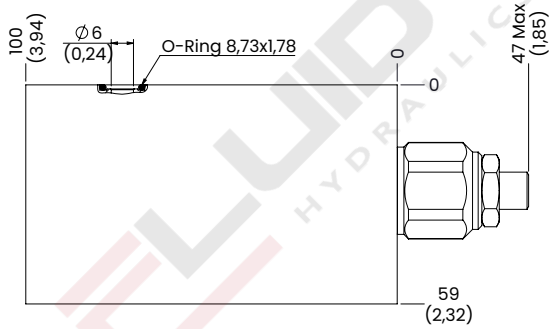

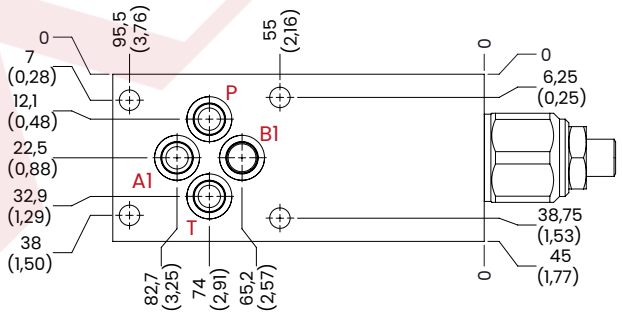

mm [Inches]

TAMPER PROOF CAP M10

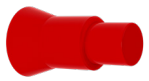

CODE
62200021

ORDERING CODE

CODE	TYPE	F ports	MAX FLOW l/min [USgpm]	MAX PRESSURE bar [PSI]	STANDARD SETTING bar [PSI]	RANGE SPRING bar [PSI]	INCREASE TO TURN bar [PSI]	PILOT RATIO	WEIGHT kg [lb]
FA1100	BCE3C21	CETOP 3	60 [15,99]	350 [5075]	210 [3045]	30/210 [435/3045]	80 [1160]	1:4,25	2,03 [4,46]
FA1101	BCE3C35				350 [5075]	60/350 [870/5075]	135 [1960]	On request 1:8,1	
Standard setting 350 bar [5075 PSI] **to 5 l/m** [1,32 USgpm]					**Standard setting 210 bar** [3045 PSI] **to 5 l/m** [1,32 USgpm]				
Steel body (on request aluminium body)									

UPDATE. Mar. 2024 (v.03)

Mineral oil: DIN 51524 ISO 6743/4 | Oil viscosity: 15 to 250 cSt 15-250 mm2/s | Oil temperature: -4°F + 176°F -20°C +80°C | Ambient temperature: -4°F + 122°F -20°C +50°C | Max contamination index with filter: 5 to 250 cSt 15-250 mm2/s | It is necessary a filter use to protect the valve (advised filtration 15 µm) | Max leakage: 0,25 cm3/min - 5 drops/min at 80% of the calibration pressure

Via Guadiana n° 8/1, 42124 Reggio Emilia - ITALY | www.fluid-app.it | sales@fluid-app.it

BCH COUNTERBALANCE CETOP3 "A"

SINGLE COUNTERBALANCE VALVES - CETOP 3 (A) FOR CLOSED CENTER

Counterbalance valves are used to keep a load locked, the built-in relief valve protects the system from overpressure in the cylinder by draining the oil.

HYDRAULIC CIRCUIT

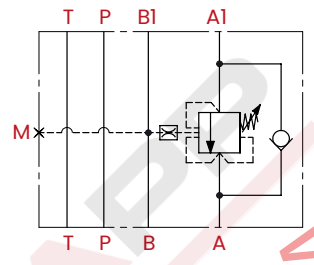

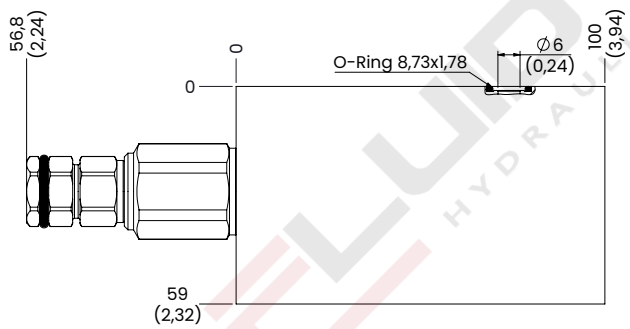

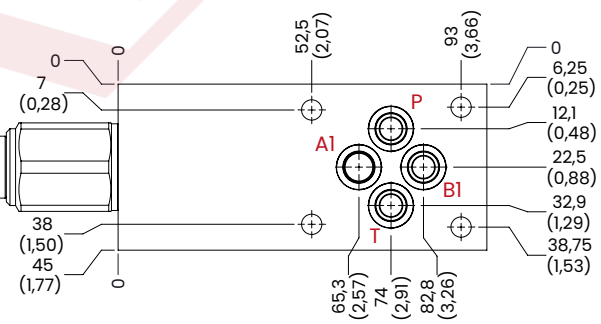

mm [Inches]

PERFORMANCES

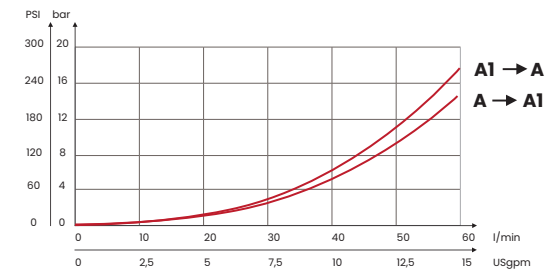

ORDERING CODE

CODE	TYPE	F ports	MAX FLOW l/min [USgpm]	MAX PRESSURE bar [PSI]	STANDARD SETTING bar [PSI]	RANGE SPRING bar [PSI]	INCREASE TO TURN bar [PSI]	PILOT RATIO	WEIGHT kg [lb]
FA1104	BCH3C21	CETOP 3	60 [15,99]	350 [5075]	210 [3045]	30/210 [435/3045]	80 [1160]	1:4,25 On request 1:8,1	2,09 [4,60]
FA1105	BCH3C35				350 [5075]	60/350 [870/5075]	135 [1960]		
Standard setting 350 bar [5075 PSI] **to 5 l/m** [1,32 USgpm]					**Standard setting 210 bar** [3045 PSI] **to 5 l/m** [1,32 USgpm]				
Steel body (on request aluminium body)									

UPDATE. Mar. 2024 (v.03)

Mineral oil: DIN 51524 ISO 6743/4 | Oil viscosity: 15 to 250 cSt 15-250 mm2/s | Oil temperature: -4°F + 176°F -20°C +80°C | Ambient temperature: -4°F + 122°F -20°C +50°C | Max contamination index with filter: 5 to 250 cSt 15-250 mm2/s | It is necessary a filter use to protect the valve (advised filtration 15 µm) | Max leakage: 0,25 cm3/min - 5 drops/min at 80% of the calibration pressure

Via Guadiana n° 8/1, 42124 Reggio Emilia - ITALY | www.fluid-app.it | sales@fluid-app.it

BCF COUNTERBALANCE CETOP3 "B"

SINGLE COUNTERBALANCE VALVES - CETOP 3 (B) FOR CLOSED CENTER

Counterbalance valves are used to keep a load locked, the built-in relief valve protects the system from overpressure in the cylinder by draining the oil.

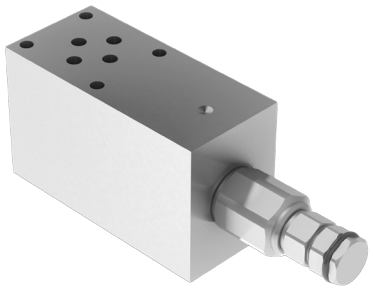

HYDRAULIC CIRCUIT

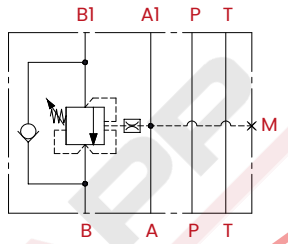

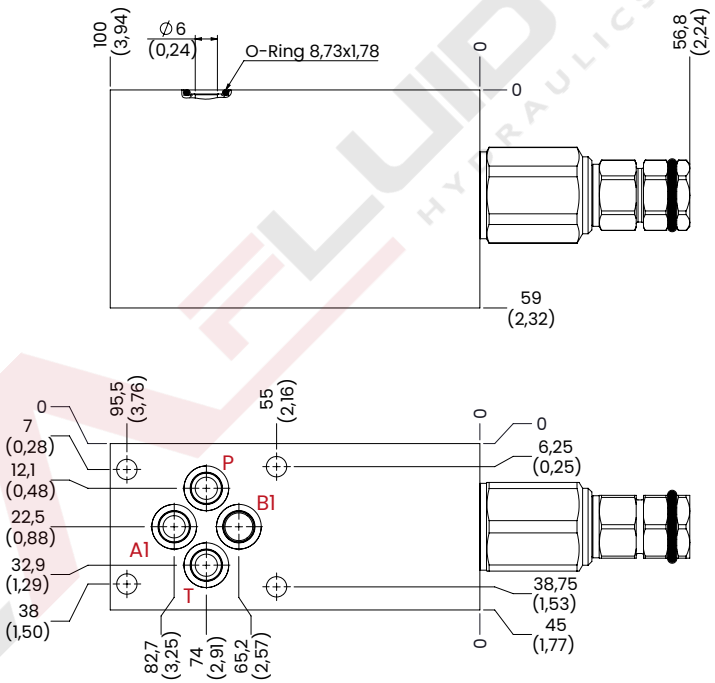

mm [Inches]

PERFORMANCES

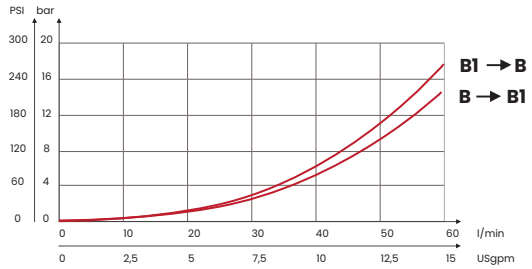

ORDERING CODE

CODE	TYPE	F ports	MAX FLOW l/min [USgpm]	MAX PRESSURE bar [PSI]	STANDARD SETTING bar [PSI]	RANGE SPRING bar [PSI]	INCREASE TO TURN bar [PSI]	PILOT RATIO	WEIGHT kg [lb]
FA1102	BCF3C21	CETOP 3	60 [15,99]	350 [5075]	210 [3045]	30/210 [435/3045]	80 [1160]	1:4,25 On request 1:8,1	2,09 [4,60]
FA1103	BCF3C35				350 [5075]	60/350 [870/5075]	135 [1960]		
Standard setting 350 bar [5075 PSI] **to 5 l/m** [1,32 USgpm]					**Standard setting 210 bar** [3045 PSI] **to 5 l/m** [1,32 USgpm]				
Steel body (on request aluminium body)									

UPDATE. Mar. 2024 (v.03)

Mineral oil: DIN 51524 ISO 6743/4 | Oil viscosity: 15 to 250 cSt 15-250 mm2/s | Oil temperature: -4°F + 176°F -20°C +80°C | Ambient temperature: -4°F + 122°F -20°C +50°C | Max contamination index with filter: 5 to 250 cSt 15-250 mm2/s | It is necessary a filter use to protect the valve (advised filtration 15 µm) | Max leakage: 0,25 cm3/min - 5 drops/min at 80% of the calibration pressure

Via Guadiana n° 8/1, 42124 Reggio Emilia - ITALY | www.fluid-app.it | sales@fluid-app.it

BDA COUNTERBALANCE BSPP

DOUBLE COUNTERBALANCE VALVES FOR OPEN CENTER

BDA counterbalance valves (Gas thread) are used to keep a load locked, the built-in relief valve protects the system from overpressure in the cylinder by draining the oil.

HYDRAULIC CIRCUIT

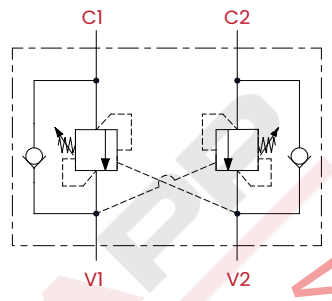

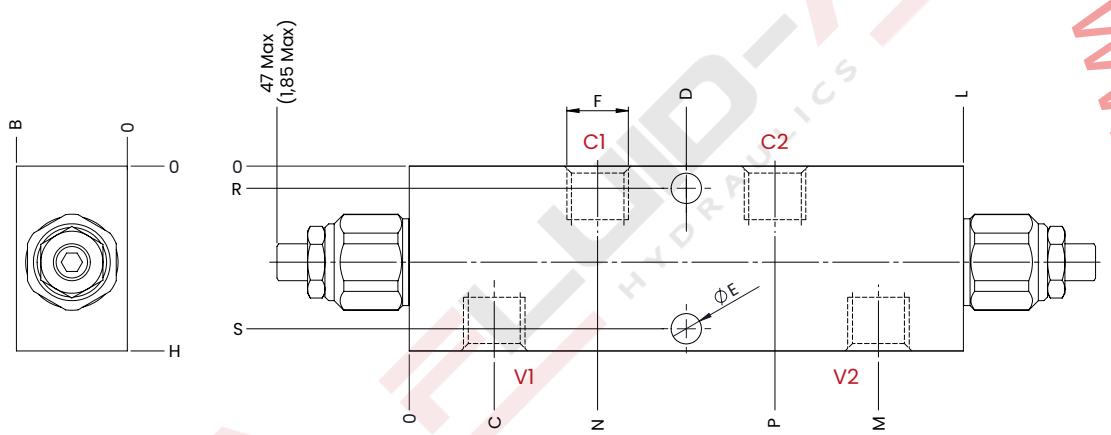

TECHNICAL CHARACTERISTICS

mm [Inches]

F	H	B	C	D	ØE	L	M	N	P	R	S
1/4 BSPP	50 [1,97]	30 [1,18]	23 [0,91]	75 [2,95]	8,2 [0,32]	150 [5,90]	127 [5]	51 [2,01]	99 [3,9]	6 [0,24]	44 [1,75]
3/8 BSPP											
1/2 BSPP	60 [2,36]		21 [0,83]				129 [5,08]			8,5 [0,33]	51,5 [2,03]
3/4 BSPP	70 [2,75]	40 [1,57]	26 [1,02]	105 [4,13]	10,5 [0,41]	210 [8,27]	184 [7,24]	71 [2,78]	139 [5,47]	9 [0,35]	61 [2,4]
1 BSPP	80 [3,15]	50 [1,97]								10 [0,39]	70 [2,75]

Steel body (on request aluminium body - stainless steel AISI 316L body)

PERFORMANCES

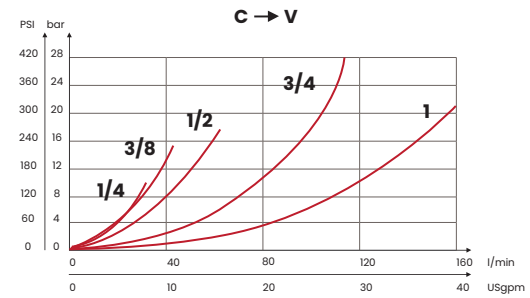

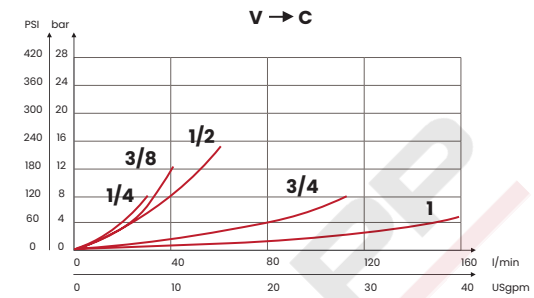

TAMPER PROOF CAP M10

CODE
62200021

ORDERING CODE

CODE	TYPE	F ports	MAX FLOW l/min [USgpm]	MAX PRESSURE bar [PSI]	STANDARD SETTING bar [PSI]	RANGE SPRING bar [PSI]	INCREASE TO TURN bar [PSI]	PILOT RATIO	WEIGHT kg [lb]
FA2001	BDA1B21	1/4 BSPP	30 [7,9]	350 [5075]	210 [3045]	30/210 [435/3045]	80 [1160]	1:4,25 On request 1:8,1	1,80 [4]
FA2002	BDA1B35				350 [5075]	60/350 [870/5075]	135 [1960]		
FA2003	BDA2B21	3/8 BSPP	40 [10,6]		210 [3045]	30/210 [435/3045]	80 [1160]		1,72 [3,8]
FA2004	BDA2B35				350 [5075]	60/350 [870/5075]	135 [1960]		
FA2005	BDA3B21	1/2 BSPP	60 [15,9]		210 [3045]	30/210 [435/3045]	80 [1160]		2 [4,4]
FA2006	BDA3B35				350 [5075]	60/350 [870/5075]	135 [1960]		
FA2007	BDA4B21	3/4 BSPP	110 [28,9]		210 [3045]	30/210 [435/3045]	70 [966]	1:6,2 On request 1:10,6	4,30 [9,46]
FA2008	BDA4B35				350 [5075]	60/350 [870/5075]	145 [2100]		
FA2009	BDA5B21	1 BSPP	160 [42,1]		210 [3045]	30/210 [435/3045]	70 [966]		6,8 [15]
FA2010	BDA5B35				350 [5075]	60/350 [870/5075]	145 [2100]		

Standard setting 350 bar [5075 PSI] **to 5 l/m** [1,32 USgpm] **Standard setting 210 bar** [3045 PSI] **to 5 l/m** [1,32 USgpm]

UPDATE. Sept. 2024 (v.08)

Mineral oil: DIN 51524 ISO 6743/4 | Oil viscosity: 15 to 250 cSt 15-250 mm2/s | Oil temperature: -4°F + 176°F -20°C +80°C | Ambient temperature: -4°F + 122°F -20°C +50°C | Max contamination index with filter: 5 to 250 cSt 15-250 mm2/s | It is necessary a filter use to protect the valve (advised filtration 15 µm) | Max leakage: 0,25 cm3/min - 5 drops/min at 80% of the calibration pressure

Via Guadiana n° 8/1, 42124 Reggio Emilia - ITALY | www.fluid-app.it | sales@fluid-app.it

BDAY COUNTERBALANCE BSPP

DOUBLE COUNTERBALANCE VALVES FOR OPEN CENTER

BDAY counterbalance valves (Gas thread) are used to keep a load locked, the built-in relief valve protects the system from overpressure in the cylinder by draining the oil.

HYDRAULIC CIRCUIT

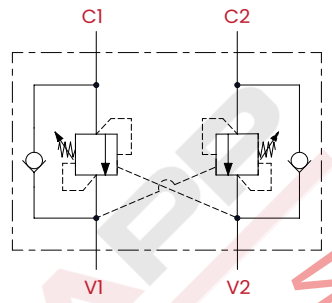

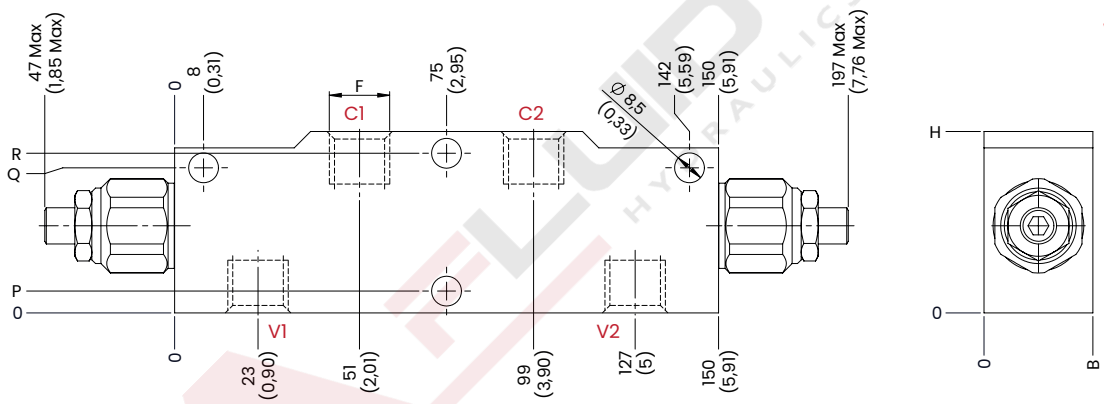

PERFORMANCES

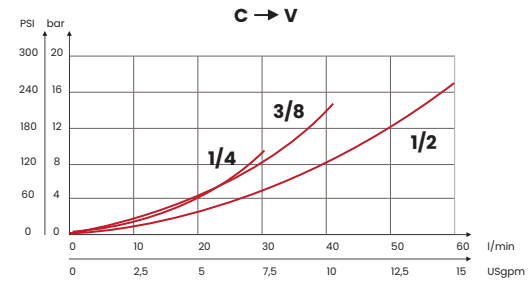

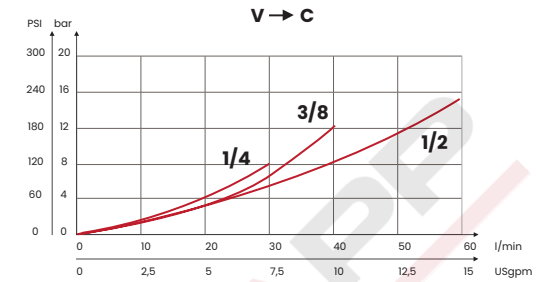

TAMPER PROOF CAP M10

CODE
62200021

ORDERING CODE

CODE	TYPE	F ports	MAX FLOW l/min [USgpm]	MAX PRESSURE bar [PSI]	STANDARD SETTING bar [PSI]	RANGE SPRING bar [PSI]	INCREASE TO TURN bar [PSI]	PILOT RATIO	WEIGHT kg [lb]
FA2011	BDA1B21YA	1/4 BSPP	30 [7,9]	350 [5075]	210 [3045]	30/210 [435/3045]	80 [1160]	1:4,25	1,8 [4]
FA2012	BDA1B35YA				350 [5075]	60/350 [870/5075]	135 [1960]		
FA2013	BDA2B21YA	3/8 BSPP	40 [10,6]		210 [3045]	30/210 [435/3045]	80 [1160]		1,72 [3,8]
FA2014	BDA2B35YA				350 [5075]	60/350 [870/5075]	135 [1960]		
FA2015	BDA3B21YA	1/2 BSPP	60 [15,9]		210 [3045]	30/210 [435/3045]	80 [1160]		2 [4,4]
FA2016	BDA3B35YA				350 [5075]	60/350 [870/5075]	135 [1960]		

Standard setting 350 bar [5075 PSI] **to 5 l/m** [1,32 USgpm] **Standard setting 210 bar** [3045 PSI] **to 5 l/m** [1,32 USgpm]

TECHNICAL CHARACTERISTICS

mm [Inches]

F	B	H	P	Q	R
1/4 BSPP	30 [1,18]	50 [1.97]	5,5 [0,22]	40,5 [1,59]	44,5 [1,75]
3/8 BSPP					
1/2 BSPP		60 [2,36]	8,5 [0,33]	46,5 [1,83]	51,5 [1,03]
Steel body					

UPDATE. Sept. 2024 (v.05)

Mineral oil: DIN 51524 ISO 6743/4 | Oil viscosity: 15 to 250 cSt 15-250 mm2/s | Oil temperature: -4°F + 176°F -20°C +80°C | Ambient temperature: -4°F + 122°F -20°C +50°C | Max contamination index with filter: 5 to 250 cSt 15-250 mm2/s | It is necessary a filter use to protect the valve (advised filtration 15 µm) | Max leakage: 0,25 cm3/min - 5 drops/min at 80% of the calibration pressure

Via Guadiana n° 8/1, 42124 Reggio Emilia - ITALY | www.fluid-app.it | sales@fluid-app.it

BDCY COUNTERBALANCE BSPP

DOUBLE COUNTERBALANCE VALVES FOR CLOSED CENTER

BDCY counterbalance valves (Gas thread) are used to keep a load locked, the built-in relief valve protects the system from overpressure in the cylinder by draining the oil.

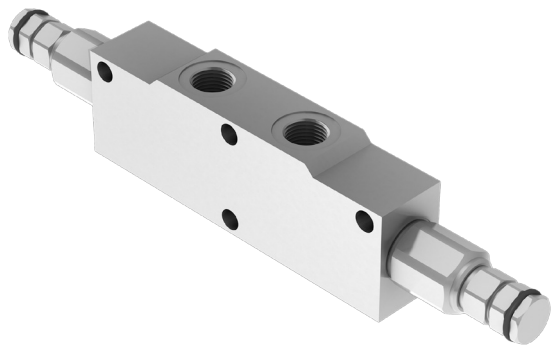

HYDRAULIC CIRCUIT

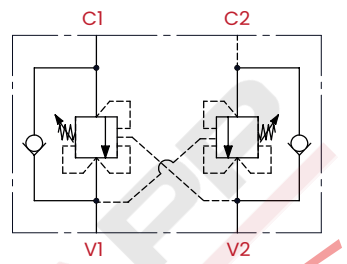

PERFORMANCES

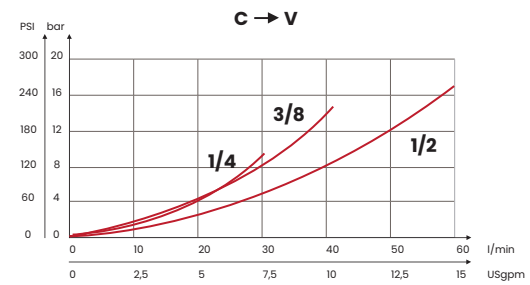

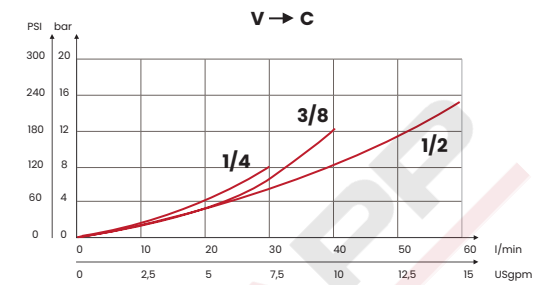

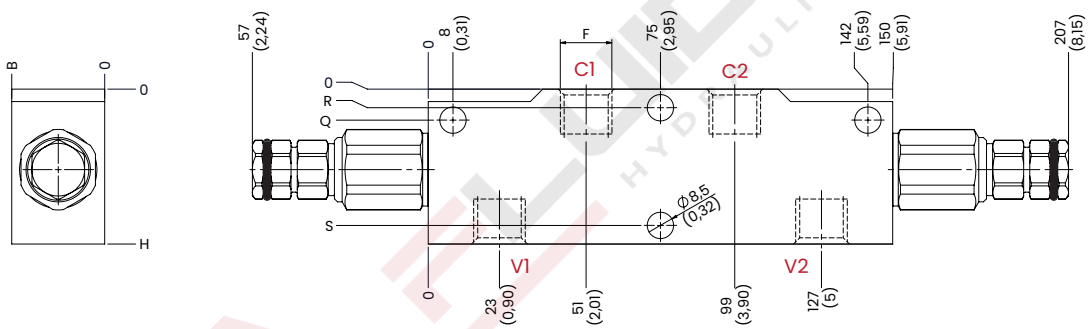

TECHNICAL CHARACTERISTICS

mm [Inches]

F	B	H	P	Q	R
1/4 BSPP	30 [1,18]	50 [1.97]	5,5 [0,22]	40,5 [1,59]	44,5 [1,75]
3/8 BSPP					
1/2 BSPP		60 [2,36]	8,5 [0,33]	46,5 [1,83]	51,5 [1,03]
Steel body					

ORDERING CODE

CODE	TYPE	F ports	MAX FLOW l/min [USgpm]	MAX PRESSURE bar [PSI]	STANDARD SETTING bar [PSI]	RANGE SPRING bar [PSI]	INCREASE TO TURN bar [PSI]	PILOT RATIO	WEIGHT kg [lb]
FA2112	BDC1B21YA	1/4 BSPP	30 [7,9]	350 [5075]	210 [3045]	30/210 [435/3045]	80 [1160]	1:4,25	1,8 [4]
FA2113	BDC1B35YA				350 [5075]	60/350 [870/5075]	135 [1960]		
FA2114	BDC2B21YA	3/8 BSPP	40 [10,6]		210 [3045]	30/210 [435/3045]	80 [1160]		1,72 [3,8]
FA2115	BDC2B35YA				350 [5075]	60/350 [870/5075]	135 [1960]		
FA2116	BDC3B21YA	1/2 BSPP	60 [15,9]		210 [3045]	30/210 [435/3045]	80 [1160]		2 [4,4]
FA2117	BDC3B35YA				350 [5075]	60/350 [870/5075]	135 [1960]		
Standard setting 350 bar [5075 PSI] **to 5 l/m** [1,32 USgpm]					**Standard setting 210 bar** [3045 PSI] **to 5 l/m** [1,32 USgpm]				

UPDATE. Sept. 2024 (v.01)

Mineral oil: DIN 51524 ISO 6743/4 | Oil viscosity: 15 to 250 cSt 15-250 mm2/s | Oil temperature: -4°F + 176°F -20°C +80°C | Ambient temperature: -4°F + 122°F -20°C +50°C | Max contamination index with filter: 5 to 250 cSt 15-250 mm2/s | It is necessary a filter use to protect the valve (advised filtration 15 µm) | Max leakage: 0,25 cm3/min - 5 drops/min at 80% of the calibration pressure

Via Guadiana n° 8/1, 42124 Reggio Emilia - ITALY | www.fluid-app.it | sales@fluid-app.it

BDC COUNTERBALANCE BSPP

DOUBLE COUNTERBALANCE VALVES FOR CLOSED CENTER

BDC counterbalance valves (Gas thread) are used to keep a load locked, the built-in relief valve protects the system from overpressure in the cylinder by draining the oil.

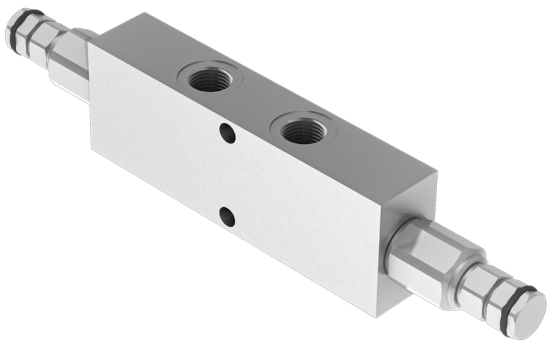

HYDRAULIC CIRCUIT

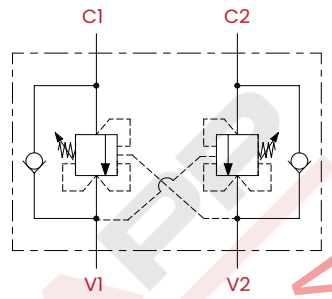

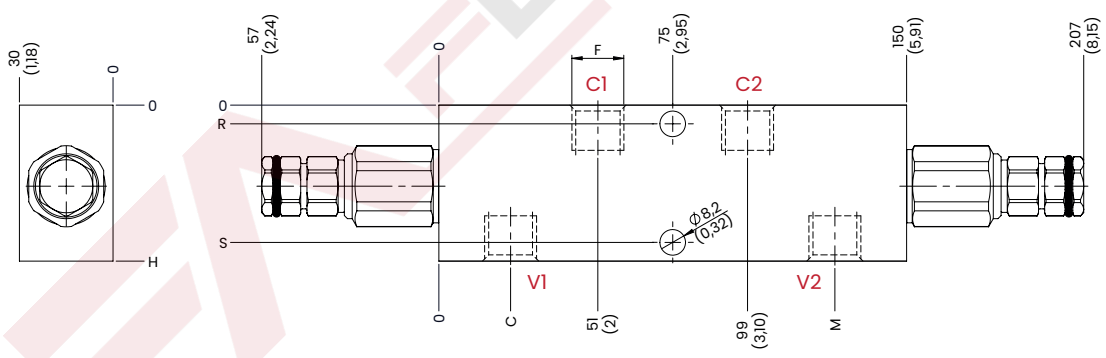

TECHNICAL CHARACTERISTICS

mm [Inches]

F	H	R	S	C	M
1/4 BSPP	50 [1,97]	6 [0,24]	44 [1,73]	23 [0,91]	127 [5]
3/8 BSPP					
1/2 BSPP	60 [2,36]	8,5 [0,33]	51,5 [2,03]	21 [0,83]	129 [5,08]
Steel body (on request aluminium body)					

PERFORMANCES

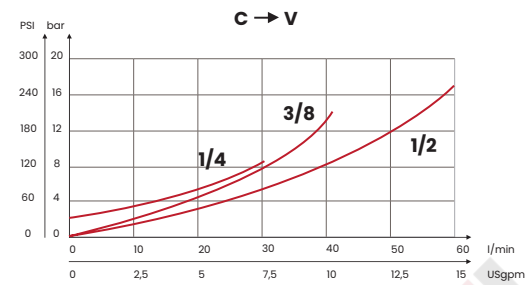

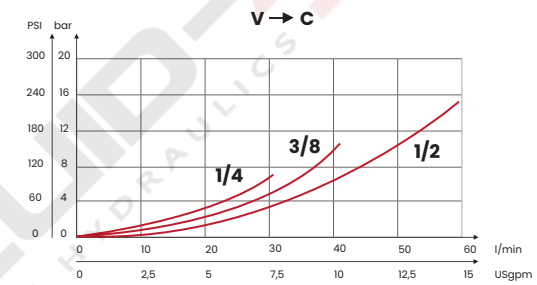

ORDERING CODE

CODE	TYPE	F ports	MAX FLOW l/min [USgpm]	MAX PRESSURE bar [PSI]	STANDARD SETTING bar [PSI]	RANGE SPRING bar [PSI]	INCREASE TO TURN bar [PSI]	PILOT RATIO	WEIGHT kg [lb]
FA2017	BDC1B21	1/4 BSPP	30 [7,9]	350 [5075]	210 [3045]	30/210 [435/3045]	80 [1160]	1:4,25 On request 1:8,1	1,9 [4,2]
FA2018	BDC1B35				350 [5075]	60/350 [870/5075]	135 [1960]		
FA2019	BDC2B21	3/8 BSPP	40 [10,6]		210 [3045]	30/210 [435/3045]	80 [1160]		1,83 [4]
FA2020	BDC2B35				350 [5075]	60/350 [870/5075]	135 [1960]		
FA2021	BDC3B21	1/2 BSPP	60 [15,9]		210 [3045]	30/210 [435/3045]	80 [1160]		2,10 [4,6]
FA2022	BDC3B35				350 [5075]	60/350 [870/5075]	135 [1960]		
Standard setting 350 bar [5075 PSI] **to 5 l/m** [1,32 USgpm]					**Standard setting 210 bar** [3045 PSI] **to 5 l/m** [1,32 USgpm]				

UPDATE. March 2023 (v.04)

Mineral oil: DIN 51524 ISO 6743/4 | Oil viscosity: 15 to 250 cSt 15-250 mm2/s | Oil temperature: -4°F + 176°F -20°C +80°C | Ambient temperature: -4°F + 122°F -20°C +50°C | Max contamination index with filter: 5 to 250 cSt 15-250 mm2/s | It is necessary a filter use to protect the valve (advised filtration 15 µm) | Max leakage: 0,25 cm3/min - 5 drops/min at 80% of the calibration pressure

Via Guadiana n° 8/1, 42124 Reggio Emilia - ITALY | www.fluid-app.it | sales@fluid-app.it

BFA COUNTERBALANCE BSPP

DOUBLE COUNTERBALANCE VALVES FOR OPEN CENTER - FLANGED VERSION

BFA counterbalance valves (Gas thread) are used to keep a load locked, the built-in relief valve protects the system from overpressure in the cylinder by draining the oil.

HYDRAULIC CIRCUIT

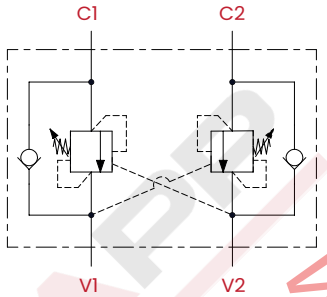

PERFORMANCES

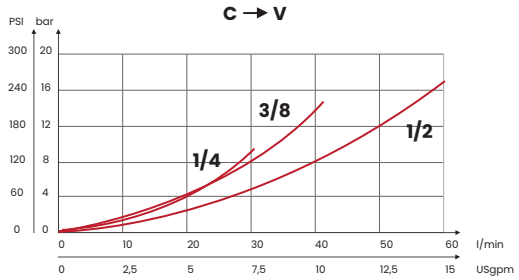

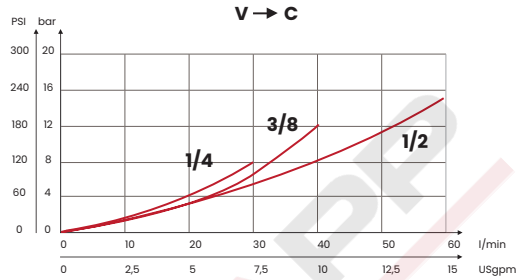

TAMPER PROOF CAP M10

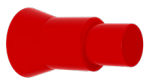

CODE
62200021

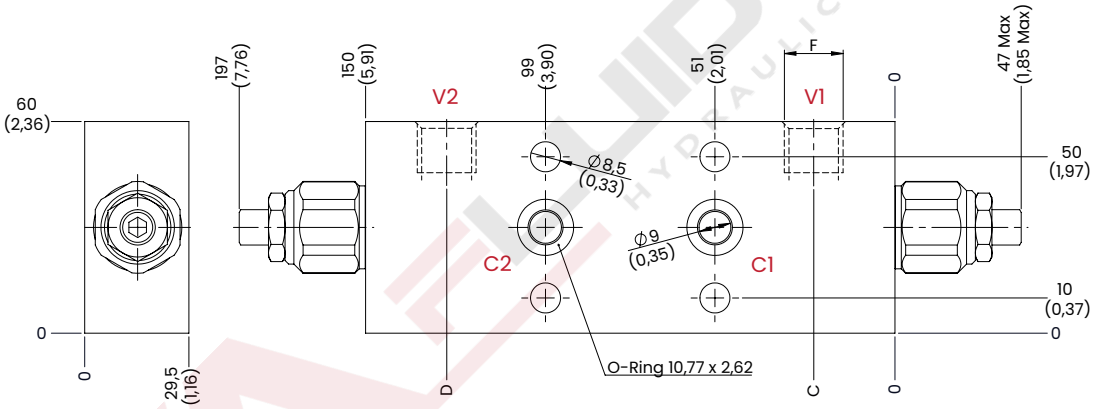

TECHNICAL CHARACTERISTICS

mm [Inches]

F	C	D
1/4 BSPP	23 [0,91]	127 [5]
3/8 BSPP		
1/2 BSPP	21 [0,83]	129 [5,07]
Steel body (on request aluminium body)		

ORDERING CODE

CODE	TYPE	F ports	MAX FLOW l/min [USgpm]	MAX PRESSURE bar [PSI]	STANDARD SETTING bar [PSI]	RANGE SPRING bar [PSI]	INCREASE TO TURN bar [PSI]	PILOT RATIO	WEIGHT kg [lb]
FA2023	BFA1B21	1/4 BSPP	30 [7,9]	350 [5075]	210 [3045]	30/210 [435/3045]	80 [1160]	1:4,25 On request 1:8,1	2,05 [4,52]
FA2024	BFA1B35				350 [5075]	60/350 [870/5075]	135 [1960]		
FA2025	BFA2B21	3/8 BSPP	40 [10,6]		210 [3045]	30/210 [435/3045]	80 [1160]		2 [4,41]
FA2026	BFA2B35				350 [5075]	60/350 [870/5075]	135 [1960]		
FA2027	BFA3B21	1/2 BSPP	60 [15,9]		210 [3045]	30/210 [435/3045]	80 [1160]		1,96 [4,32]
FA2028	BFA3B35				350 [5075]	60/350 [870/5075]	135 [1960]		
Standard setting 350 bar [5075 PSI] **to 5 l/m** [1,32 USgpm]					**Standard setting 210 bar** [3045 PSI] **to 5 l/m** [1,32 USgpm]				

UPDATE. March 2023 (v.05)

Mineral oil: DIN 51524 ISO 6743/4 | Oil viscosity: 15 to 250 cSt 15-250 mm2/s | Oil temperature: -4°F + 176°F -20°C +80°C | Ambient temperature: -4°F + 122°F -20°C +50°C | Max contamination index with filter: 5 to 250 cSt 15-250 mm2/s | It is necessary a filter use to protect the valve (advised filtration 15 µm) | Max leakage: 0,25 cm3/min - 5 drops/min at 80% of the calibration pressure

Via Guadiana n° 8/1, 42124 Reggio Emilia - ITALY | www.fluid-app.it | sales@fluid-app.it

BFC COUNTERBALANCE BSPP

DOUBLE COUNTERBALANCE VALVES FOR CLOSED CENTER - FLANGED VERSION

BFC counterbalance valves (Gas thread) are used to keep a load locked, the built-in relief valve protects the system from overpressure in the cylinder by draining the oil.

HYDRAULIC CIRCUIT

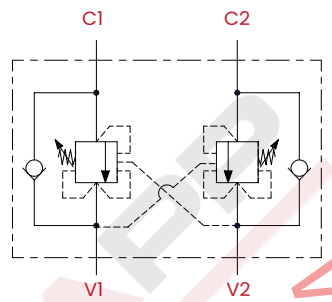

TECHNICAL CHARACTERISTICS

mm [Inches]

F	C	D
1/4 BSPP	23 [0,91]	127 [5]
3/8 BSPP		
1/2 BSPP	21 [0,83]	129 [5,07]
Steel body (on request aluminium body)		

PERFORMANCES

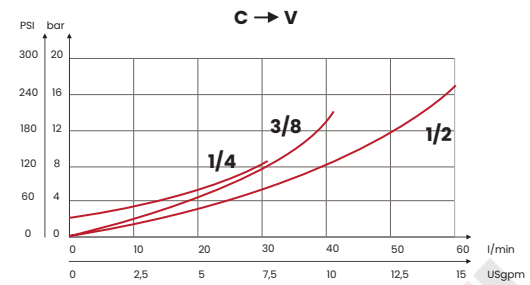

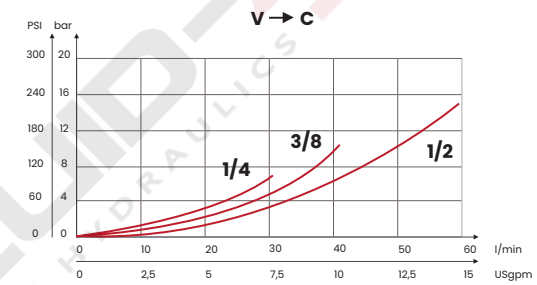

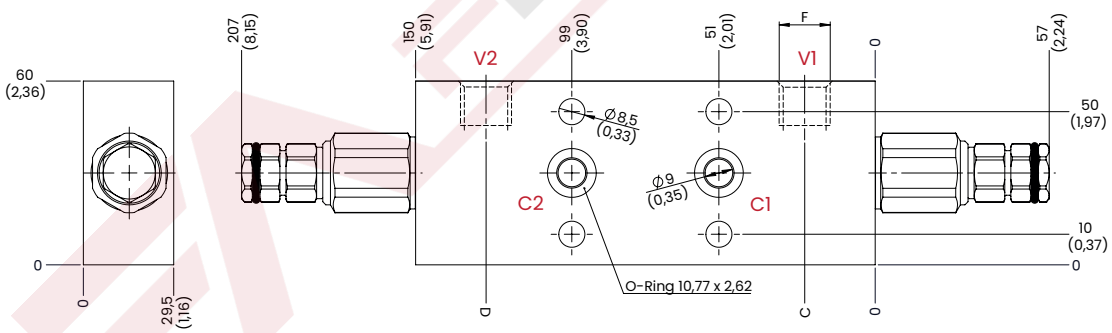

ORDERING CODE

CODE	TYPE	F ports	MAX FLOW l/min [USgpm]	MAX PRESSURE bar [PSI]	STANDARD SETTING bar [PSI]	RANGE SPRING bar [PSI]	INCREASE TO TURN bar [PSI]	PILOT RATIO	WEIGHT kg [lb]
FA2029	BFC1B21	1/4 BSPP	30 [7,9]	350 [5075]	210 [3045]	30/210 [435/3045]	80 [1160]	1:4,25 On request 1:8,1	2,15 [4,74]
FA2030	BFC1B35				350 [5075]	60/350 [870/5075]	135 [1960]		
FA2031	BFC2B21	3/8 BSPP	40 [10,6]		210 [3045]	30/210 [435/3045]	80 [1160]		2,1 [4,63]
FA2032	BFC2B35				350 [5075]	60/350 [870/5075]	135 [1960]		
FA2033	BFC3B21	1/2 BSPP	60 [15,9]		210 [3045]	30/210 [435/3045]	80 [1160]		2,05 [4,52]
FA2034	BFC3B35				350 [5075]	60/350 [870/5075]	135 [1960]		

Standard setting 350 bar [5075 PSI] **to 5 l/m** [1,32 USgpm] **Standard setting 210 bar** [3045 PSI] **to 5 l/m** [1,32 USgpm]

UPDATE. March 2023 (v.05)

Mineral oil: DIN 51524 ISO 6743/4 | Oil viscosity: 15 to 250 cSt 15-250 mm2/s | Oil temperature: -4°F + 176°F -20°C +80°C | Ambient temperature: -4°F + 122°F -20°C +50°C | Max contamination index with filter: 5 to 250 cSt 15-250 mm2/s | It is necessary a filter use to protect the valve (advised filtration 15 µm) | Max leakage: 0,25 cm3/min - 5 drops/min at 80% of the calibration pressure

Via Guadiana n° 8/1, 42124 Reggio Emilia - ITALY | www.fluid-app.it | sales@fluid-app.it

BCA COUNTERBALANCE CETOP3

DOUBLE COUNTERBALANCE VALVES - CETOP 3 FOR OPEN CENTER

Counterbalance valves are used to keep a load locked, the built-in relief valve protects the system from overpressure in the cylinder by draining the oil.

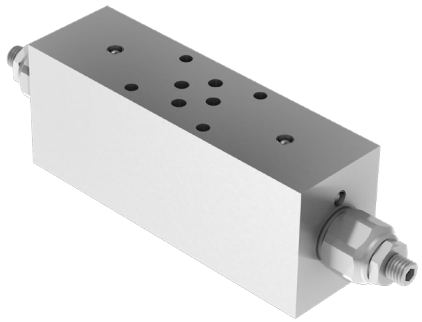

HYDRAULIC CIRCUIT

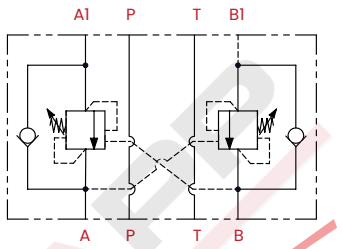

PERFORMANCES

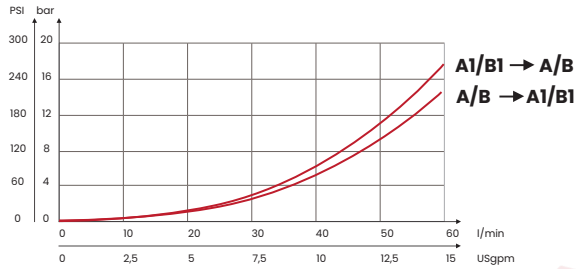

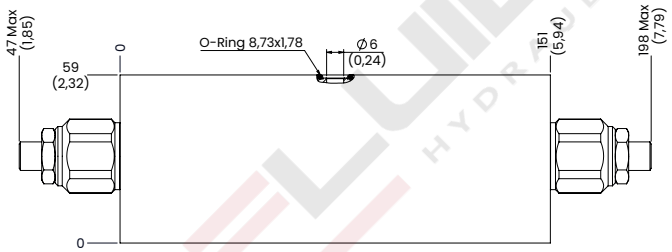

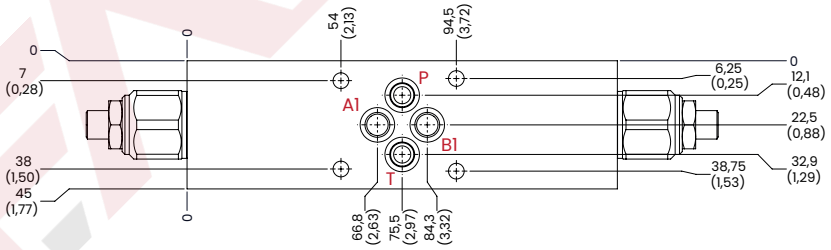

mm [Inches]

TAMPER PROOF CAP M10

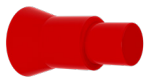

CODE
62200021

ORDERING CODE

CODE	TYPE	F ports	MAX FLOW l/min [USgpm]	MAX PRESSURE bar [PSI]	STANDARD SETTING bar [PSI]	RANGE SPRING bar [PSI]	INCREASE TO TURN bar [PSI]	PILOT RATIO	WEIGHT kg [lb]
FA2081	BCA3C21	CETOP 3	60 [15,99]	350 [5075]	210 [3045]	30/210 [435/3045]	80 [1160]	1:4,25	3,15 [6,93]
FA2082	BCA3C35				350 [5075]	60/350 [870/5075]	135 [1960]	On request 1:8,1	
Standard setting 350 bar [5075 PSI] **to 5 l/m** [1,32 USgpm]					**Standard setting 210 bar** [3045 PSI] **to 5 l/m** [1,32 USgpm]				
Steel body (on request aluminium body)									

UPDATE. October 2023 (v.05)

Mineral oil: DIN 51524 ISO 6743/4 | Oil viscosity: 15 to 250 cSt 15-250 mm2/s | Oil temperature: -4°F + 176°F -20°C +80°C | Ambient temperature: -4°F + 122°F -20°C +50°C | Max contamination index with filter: 5 to 250 cSt 15-250 mm2/s | It is necessary a filter use to protect the valve (advised filtration 15 µm) | Max leakage: 0,25 cm3/min - 5 drops/min at 80% of the calibration pressure

Via Guadiana n° 8/1, 42124 Reggio Emilia - ITALY | www.fluid-app.it | sales@fluid-app.it

BCC COUNTERBALANCE CETOP3

DOUBLE COUNTERBALANCE VALVES - CETOP 3 FOR CLOSED CENTER

Counterbalance valves are used to keep a load locked, the built-in relief valve protects the system from overpressure in the cylinder by draining the oil.

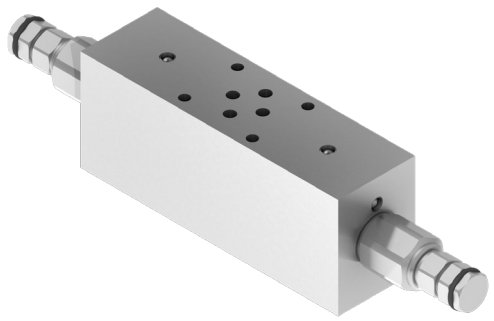

HYDRAULIC CIRCUIT

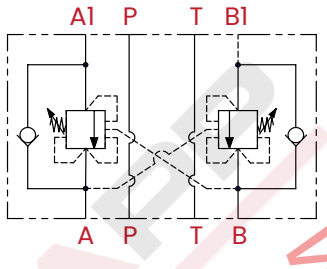

PERFORMANCES

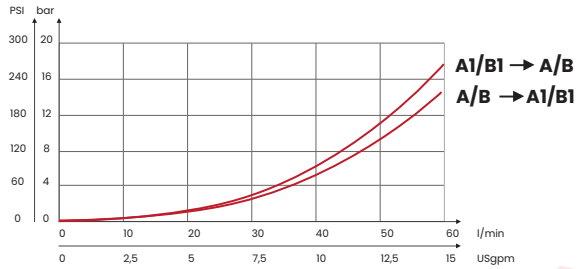

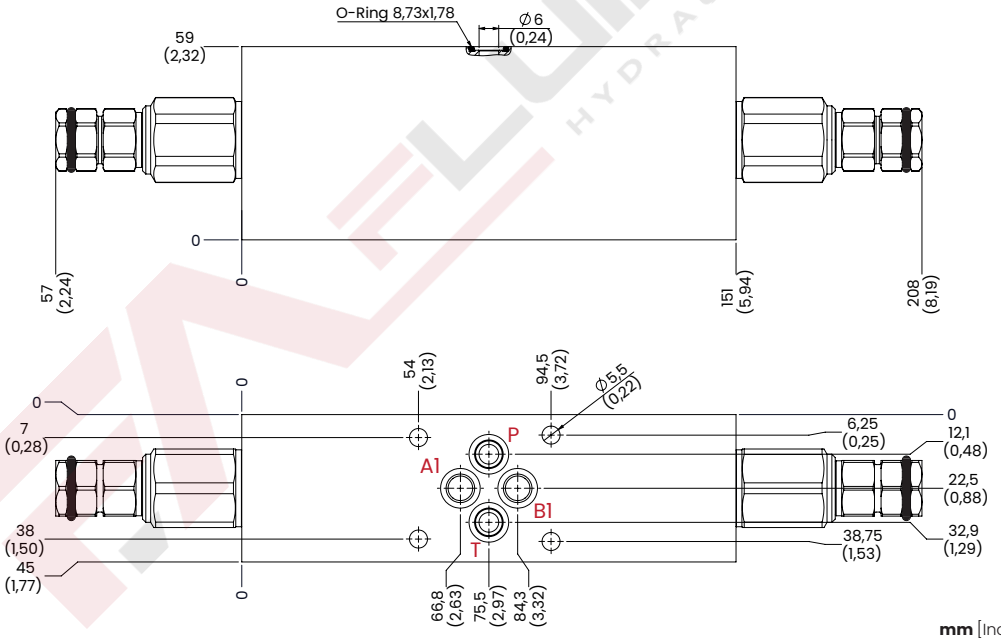

mm [Inches]

ORDERING CODE

CODE	TYPE	F ports	MAX FLOW l/min [USgpm]	MAX PRESSURE bar [PSI]	STANDARD SETTING bar [PSI]	RANGE SPRING bar [PSI]	INCREASE TO TURN bar [PSI]	PILOT RATIO	WEIGHT kg [lb]
FA2083	BCC3C21	CETOP 3	60 [15,99]	350 [5075]	210 [3045]	30/210 [435/3045]	80 [1160]	1:4,25	3,3 [7,26]
FA2084	BCC3C35				350 [5075]	60/350 [870/5075]	135 [1960]	On request 1:8,1	
Standard setting 350 bar [5075 PSI] **to 5 l/m** [1,32 USgpm]					**Standard setting 210 bar** [3045 PSI] **to 5 l/m** [1,32 USgpm]				
Steel body (on request aluminium body)									

UPDATE. October 2023 (v.05)

Mineral oil: DIN 51524 ISO 6743/4 | Oil viscosity: 15 to 250 cSt 15-250 mm2/s | Oil temperature: -4°F + 176°F -20°C +80°C | Ambient temperature: -4°F + 122°F -20°C +50°C | Max contamination index with filter: 5 to 250 cSt 15-250 mm2/s | It is necessary a filter use to protect the valve (advised filtration 15 µm) | Max leakage: 0,25 cm3/min - 5 drops/min at 80% of the calibration pressure

Via Guadiana n° 8/1, 42124 Reggio Emilia - ITALY | www.fluid-app.it | sales@fluid-app.it

UFC CHECK VALVES BSPP

CHECK VALVES

The UFC (Gas thread) check valves allow the full flow of oil in one direction and stop the flow in the opposite direction.
The applications where these valves can be used are many, agricultural machinery or industrial installations.

HYDRAULIC CIRCUIT

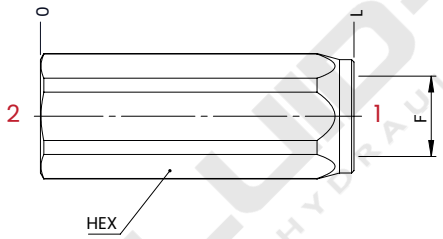

PERFORMANCES

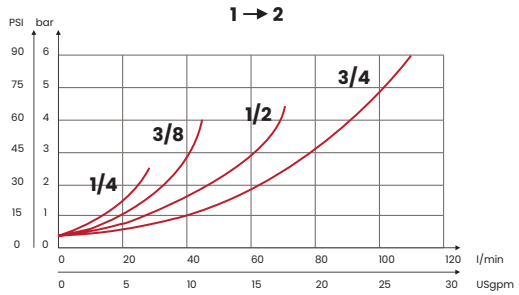

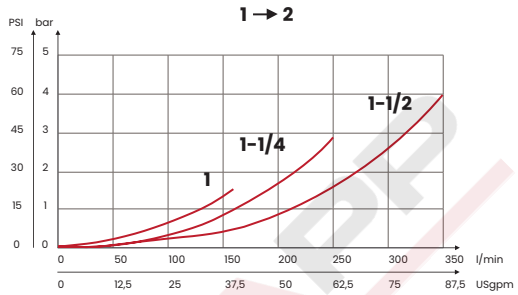

ORDERING CODE

CODE	TYPE	F ports	MAX FLOW l/min [USgpm]	MAX PRESSURE bar [PSI]	CRACKING PRESSURE bar [PSI]	WEIGHT kg [lb]
FA3001	UFC1B05	1/4 BSPP	30 [7,92]	400 [5800]	Poppet type 0,5 Standard [7,3] On request 3 [43,5] 6 [87]	0,10 [0,22]
FA3004	UFC2B05	3/8 BSPP	45 [12]			0,18 [0,40]
FA3007	UFC3B05	1/2 BSPP	70 [18,5]			0,23 [0,50]
FA3010	UFC4B05	3/4 BSPP	110 [28,9]			0,45 [1]
FA3013	UFC5B05	1 BSPP	160 [42,1]	350 [5075]		0,73 [1,6]
FA3016	UFC6B05	1-1/4 BSPP	250 [66]			1,5 [3,3]
FA3019	UFC7B05	1-1/2 BSPP	350 [92,5]			1,85 [4,07]
FA3022	UFS1B05	1/4 BSPP	30 [7,92]	400 [5800]	Ball type 0,5 [7,3]	0,10 [0,22]
FA3023	UFS2B05	3/8 BSPP	45 [12]			0,18 [0,40]
FA3024	UFS3B05	1/2 BSPP	70[18,5]			0,23 [0,50]

TECHNICAL CHARACTERISTICS

mm [Inches]

F	L	HEX
1/4 BSPP	55 [2,17]	19
3/8 BSPP	65 [2,56]	24
1/2 BSPP	75 [2,95]	27
3/4 BSPP	86,5 [3,41]	35
1 BSPP	110 [4,33]	41
1-1/4 BSPP	123 [4,84]	55
1-1/2 BSPP	138 [5,43]	60
Steel body		

On request (only for poppet type)
• Calibration hole

UPDATE. June 2024 (v.08)

Mineral oil: DIN 51524 ISO 6743/4 | Oil viscosity: 15 to 250 cSt 15-250 mm2/s | Oil temperature: -4°F + 176°F -20°C +80°C | Ambient temperature: -4°F + 122°F -20°C +50°C | Max contamination index with filter: 5 to 250 cSt 15-250 mm2/s | It is necessary a filter use to protect the valve (advised filtration 15 µm) | Max leakage: 0,25 cm3/min - 5 drops/min

Via Guadiana n° 8/1, 42124 Reggio Emilia - ITALY | www.fluid-app.it | sales@fluid-app.it

UMC CHECK VALVES BSPP

CHECK VALVES

The UMC (Gas thread) check valves allow the full flow of oil in one direction and stop the flow in the opposite direction. The applications where these valves can be used are many, agricultural machinery or industrial installations.

HYDRAULIC CIRCUIT

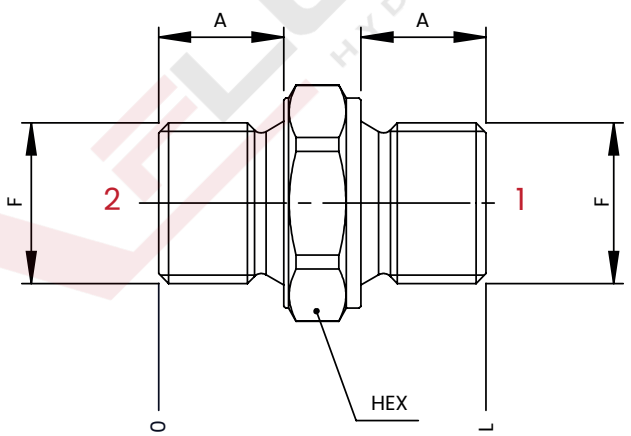

mm [Inches]

TECHNICAL CHARACTERISTICS

mm [Inches]

F	L	A	HEX
1/4 BSPP	29 [1,14]	11 [0,43]	19
3/8 BSPP	34 [1,34]	13 [0,51]	22
1/2 BSPP	44 [1,73]	14 [0,55]	27

On request (only for poppet type)
• Calibration hole

PERFORMANCES

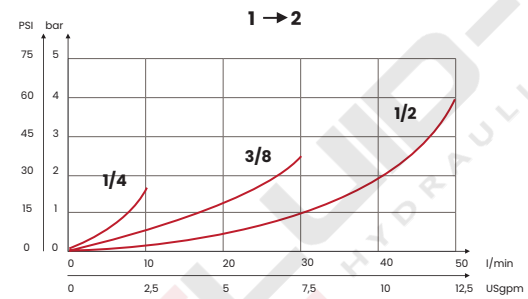

ORDERING CODE

CODE	TYPE	F ports	MAX FLOW l/min [USgpm]	MAX PRESSURE bar [PSI]	TIGHTENING TORQUE Nm [lbt ft]	MAX TIGHTENING TORQUE FOR HOSE Nm [lbt ft]	CRACKING PRESSURE bar [PSI]	WEIGHT kg [lb]
FA3025	UMC1B05	1/4 BSPP	10 [2,64]	500 [7250]	30 [22,2]	20 [14,75]	Poppet type 0,5 Standard [7,3] On request 3 [43,5] 6 [87]	0,03 [0,07]
FA3026	UMC2B05	3/8 BSPP	30 [7,92]		45 [33,2]	35 [25,8]		0,05 [0,1]
FA3029	UMC3B05	1/2 BSPP	50 [13,2]		60 [44,3]	50 [36,8]		0,11 [0,24]
FA3032	UMS1B05	1/4 BSPP	10 [2,64]	500 [7250]	30 [22,2]	20 [14,75]	Ball type 0,5 [7,3]	0,03 [0,07]
FA3033	UMS2B05	3/8 BSPP	30 [7,92]		45 [33,2]	35 [25,8]		0,18 [0,40]
FA3034	UMS3B05	1/2 BSPP	50 [13,2]		60 [44,3]	50 [36,8]		0,23 [0,50]

UPDATE. June 2023 (v.09)

Mineral oil: DIN 51524 ISO 6743/4 | Oil viscosity: 15 to 250 cSt 15-250 mm2/s | Oil temperature: -4°F + 176°F -20°C +80°C | Ambient temperature: -4°F + 122°F -20°C +50°C | Max contamination index with filter: 5 to 250 cSt 15-250 mm2/s | It is necessary a filter use to protect the valve (advised filtration 15 µm) | Max leakage: 0,25 cm3/min - 5 drops/min

Via Guadiana n° 8/1, 42124 Reggio Emilia - ITALY | www.fluid-app.it | sales@fluid-app.it

VUC CHECK VALVES BSPP

CHECK VALVES POPPET TYPE

The VUC check valve allow the free flow through in a direction while the flow is blocked in the opposite one. It is suitable for integrated circuits mounted on hydraulic blocks. The unidirectional check valve is useful where the design requires small size valve. The external seal is ensured by an o-ring.

HYDRAULIC CIRCUIT

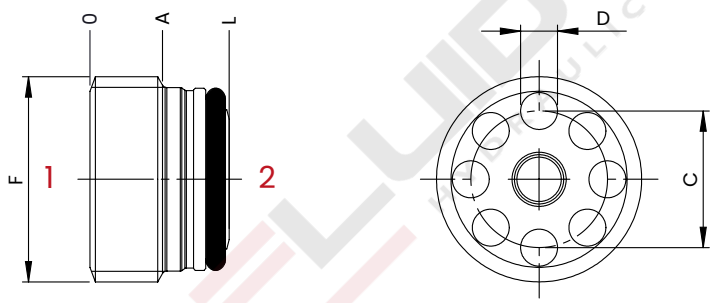

TOOL

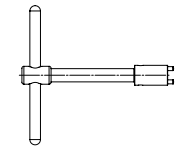

CODE	TYPE
CHI08	VUC0B
CHI09	VUC1B
CHI10	VUC2B
CHI11	VUC3B
CHI12	VUC4B

PERFORMANCES

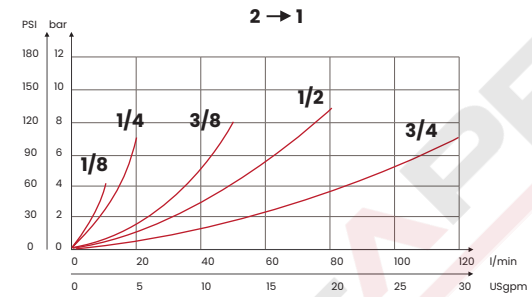

TECHNICAL CHARACTERISTICS

mm [Inches]

F	L	A	C	D
1/8 BSPP	7,5 [0,29]	3,5 [0,13]	5,6 [0,22]	1,6 [0,06]
1/4 BSPP	8,5 [0,33]	4,4 [0,17]	8,4 [0,33]	2,2 [0,08]
3/8 BSPP	11,3 [0,44]	6 [0,23]	11,1 [0,43]	3 [0,12]
1/2 BSPP	12,7 [0,5]	6,5 [0,25]	13,5 [0,53]	3,8 [0,15]
3/4 BSPP	14,8 [0,58]	7,6 [0,3]	16,5 [0,65]	5 [0,19]

ORDERING CODE

CODE	TYPE	CAVITY CODE	F ports	MAX FLOW l/min [USgpm]	MAX PRESSURE bar [PSI]	TIGHTENING TORQUE Nm [lbt ft]	CRACKING PRESSURE bar [PSI]	WEIGHT kg [lb]
FA3035	VUC0B	FC119	1/8 BSPP	10 [2,65]	350 [5075]	6 [4,4]	0,5 [7,3]	0,002 [0,004]
FA3036	VUC1B	FC111	1/4 BSPP	20 [5,3]		15 [11]		0,005 [0,011]
FA3037	VUC2B	FC112	3/8 BSPP	50 [13,19]		30 [22]		0,011 [0,024]
FA3038	VUC3B	FC113	1/2 BSPP	80 [21,11]				0,019 [0,042]
FA3039	VUC4B	FC114	3/4 BSPP	120 [31,66]		50 [37]		0,040 [0,088]

See cavity paragraph p. 231

UPDATE. Jan. 2024 (v.0)

Mineral oil: DIN 51524 ISO 6743/4 | Oil viscosity: 15 to 250 cSt 15-250 mm2/s | Oil temperature: -4°F + 176°F -20°C +80°C | Ambient temperature: -4°F + 122°F -20°C +50°C | Max contamination index with filter: 5 to 250 cSt 15-250 mm2/s | It is necessary a filter use to protect the valve (advised filtration 15 µm) | Max leakage: 0,25 cm3/min - 5 drops/min

Via Guadiana n° 8/1, 42124 Reggio Emilia - ITALY | www.fluid-app.it | sales@fluid-app.it

VUD CHECK VALVES BSPP

CHECK VALVES POPPET TYPE

The VUD check valve allow the free flow through in a direction while the flow is blocked in the opposite one. It is suitable for integrated circuits mounted on hydraulic blocks. The unidirectional check valve is useful where the design requires small size valve. The external seal is ensured by an o-ring.

HYDRAULIC CIRCUIT

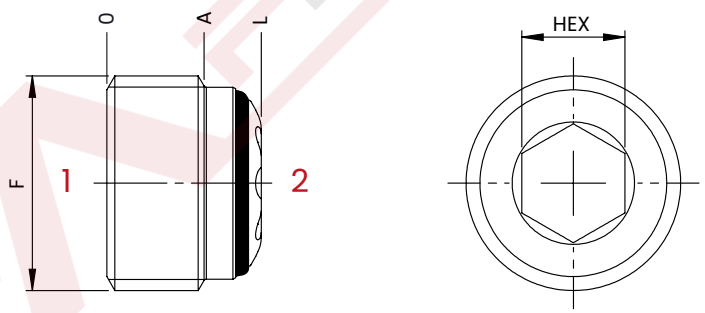

mm [Inches]

TECHNICAL CHARACTERISTICS

mm [Inches]

F	L	A	HEX
1/8 BSPP	8 [0,31]	3,9 [0,15]	4
1/4 BSPP	10,2 [0,4]	5,5 [0,21]	6
3/8 BSPP	11,7 [0,46]	7,5 [0,29]	8
1/2 BSPP	13,5 [0,53]	7,9 [0,31]	10
3/4 BSPP	17,5 [0,45]	11,5 [0,45]	

PERFORMANCES

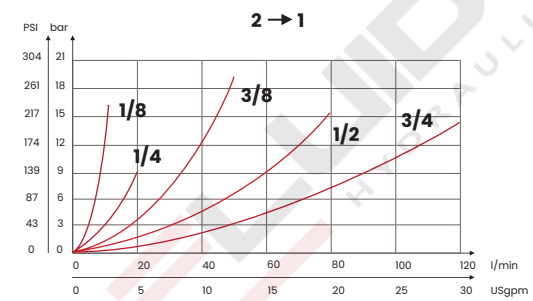

ORDERING CODE

CODE	TYPE	CAVITY	F ports	MAX FLOW l/min [USgpm]	MAX PRESSURE bar [PSI]	TIGHTENING TORQUE Nm [lbt ft]	CRACKING PRESSURE bar [PSI]	WEIGHT kg [lb]
FA3040	VUD0B	FC120	1/8 BSPP	10 [2,65]	350 [5075]	9 [6,6]	0,5 [7,3]	0,003 [0,007]
FA3041	VUD1B	FC107	1/4 BSPP	20 [5,3]		15 [11]		0,007 [0,015]
FA3042	VUD2B	FC108	3/8 BSPP	50 [13,19]		25 [18,4]		0,015 [0,033]
FA3043	VUD3B	FC109	1/2 BSPP	80 [21,11]		40 [29,5]		0,023 [0,05]
FA3044	VUD4B	FC110	3/4 BSPP	120 [31,66]		50 [37]		0,050 [0,11]

See cavity paragraph p. 231

UPDATE. June 2023 (v.04)

Mineral oil: DIN 51524 ISO 6743/4 | Oil viscosity: 15 to 250 cSt 15-250 mm2/s | Oil temperature: -4°F + 176°F -20°C +80°C | Ambient temperature: -4°F + 122°F -20°C +50°C | Max contamination index with filter: 5 to 250 cSt 15-250 mm2/s | It is necessary a filter use to protect the valve (advised filtration 15 µm) | Max leakage: 0,25 cm3/min - 5 drops/min

Via Guadiana n° 8/1, 42124 Reggio Emilia - ITALY | www.fluid-app.it | sales@fluid-app.it

VUS CHECK VALVES BSPP

CHECK VALVES BALL TYPE

The VUS check valve allow the free flow through in a direction while the flow is blocked in the opposite one. It is suitable for integrated circuits mounted on hydraulic blocks. The check valve is useful where the design requires small size valve. The external seal is ensured by an o-ring. They are protected externally by a manganese phosphating treatment.

HYDRAULIC CIRCUIT

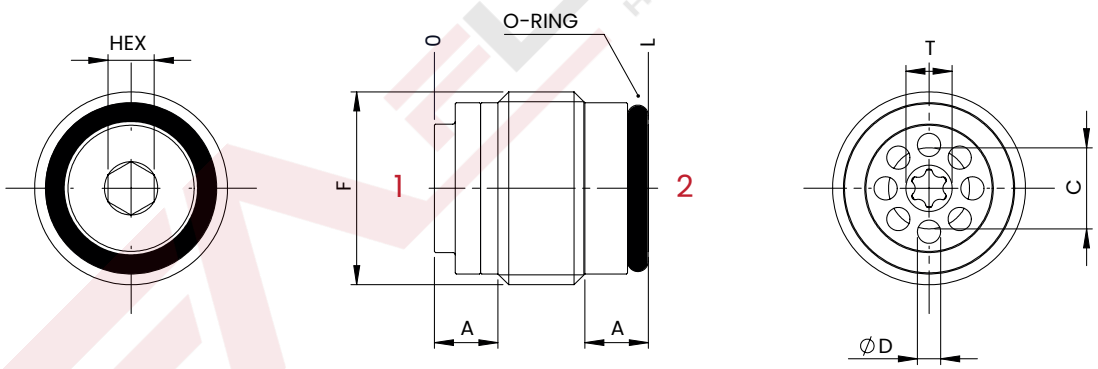

It's possible to install the valve in both directions

mm [Inches]

TECHNICAL CHARACTERISTICS

mm [Inches]

F	L	A	C	D	HEX	T	O-RING
1/4 BSPP	17 [0,67]	5,5 [0,22]	6 [0,24]	1,3 [0,05]	3	Torx T15	9 x 1
3/8 BSPP	18,5 [0,73]		7,5 [0,30]	2 [0,08]	4	Torx T15	10,82 x 1,78
1/2 BSPP	22,5 [0,88]	7[0,28]	10 [0,39]	2,5 [0,1]	6	HEX 5	14 x 1,78
3/4 BSPP	28 [1,20]	8 [0,31]	14 [0,55]	3 [0,12]	8	HEX 8	18,72 x 2,62

PERFORMANCES

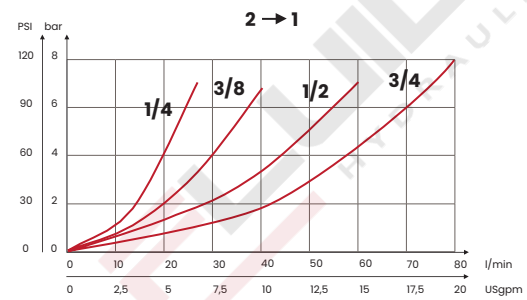

ORDERING CODE

CODE	TYPE	CAVITY	F ports	MAX FLOW l/min [USgpm]	MAX PRESSURE bar [PSI]	TIGHTENING TORQUE Nm [lbt ft]	CRACKING PRESSURE bar [PSI]	WEIGHT kg [lb]
FA3045	VUS1B	FC107	1/4 BSPP	20 [5,3]	350 [5075]	4 [3]	0,5 [7,3]	0,01 [0,022]
FA3046	VUS2B	FC108	3/8 BSPP	30 [7,9]		6 [4,4]		0,018 [0,040]
FA3047	VUS3B	FC109	1/2 BSPP	50 [13,2]		10 [7,4]		0,033 [0,073]
FA3048	VUS4B	FC110	3/4 BSPP	80 [21]		20 [14,8]		0,082 [0,18]

See cavity paragraph p. 231

UPDATE. October 2023 (v.09)

Mineral oil: DIN 51524 ISO 6743/4 | Oil viscosity: 15 to 250 cSt 15-250 mm2/s | Oil temperature: -4°F + 176°F -20°C +80°C | Ambient temperature: -4°F + 122°F -20°C +50°C | Max contamination index with filter: 5 to 250 cSt 15-250 mm2/s | It is necessary a filter use to protect the valve (advised filtration 15 µm) | Max leakage: 0,25 cm3/min - 5 drops/min

Via Guadiana n° 8/1, 42124 Reggio Emilia - ITALY | www.fluid-app.it | sales@fluid-app.it

F1B FLOW CONTROL 1/4 BSPP

1/4 BSPP FLOW CONTROL VALVES - PRESSURE COMPENSATED

The fixed compensated flow control valve F1B (1/4 G) is used to keep the descent speed of a load constant, regardless of the operating pressure and the value of the load. Typical use is related to tail lifts and hydraulic platforms. They are protected externally by a manganese phosphating treatment.

HYDRAULIC CIRCUIT

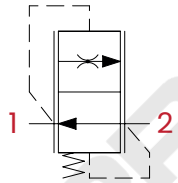

CODE

33300011

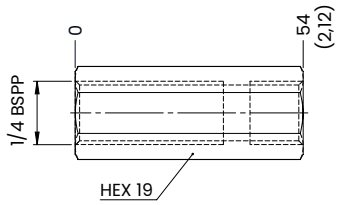

CODE

33300027

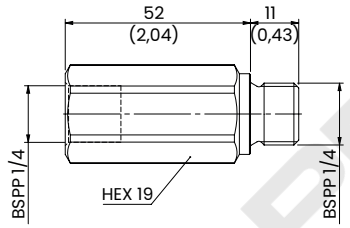

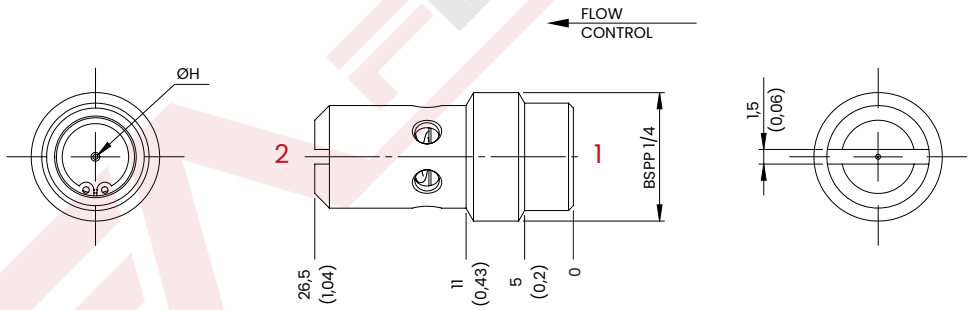

mm [Inches]

ORDERING CODE

CODE	TYPE	CAVITY	CONTROLLED FLOW AT 100 bar ± 10% l/min [USgpm]	Ø H mm [Inches]	MAX PRESSURE bar [PSI]	TIGHTENING TORQUE Nm [lbt ft]	WEIGHT kg [lb]
FA4001	F1B01	FC105 1/4 BSPP See cavity paragraph p. 230	1 [0,26]	1 [0,04]	250 [3625]	4 [3]	0,014 [0,031]
FA4002	F1B02		2 [0,53]	1,2 [0,05]			
FA4003	F1B03		3 [0,79]	1,5 [0,06]			
FA4004	F1B04		4 [1,06]	1,7 [0,07]			
FA4005	F1B05		5 [1,32]	1,9 [0,07]			
FA4006	F1B06		6 [1,58]	2,1 [0,08]			
FA4007	F1B07		7 [1,85]	2,3 [0,09]			
FA4008	F1B08		8 [2,11]	2,4 [0,09]			
FA4009	F1B09		9 [2,38]	2,7 [0,11]			
FA4010	F1B10		10 [2,64]	2,8 [0,11]			
FA4011	F1B11		11 [2,90]	3,1 [0,12]			
FA4012	F1B12		12 [3,17]	3,3 [0,13]			
FA4013	F1B15		15 [3,96]	5 [0,20]			

UPDATE. March 2023 (v.05)

Mineral oil: DIN 51524 ISO 6743/4 | Oil viscosity: 15 to 250 cSt 15-250 mm2/s | Oil temperature: -4°F + 176°F -20°C +80°C | Ambient temperature: -4°F + 122°F -20°C +50°C | Max contamination index with filter: 5 to 250 cSt 15-250 mm2/s | It is necessary a filter use to protect the valve (advised filtration 15 µm)

Via Guadiana n° 8/1, 42124 Reggio Emilia - ITALY | www.fluid-app.it | sales@fluid-app.it

F1T *FLOW CONTROL 1/4 BSPP*

1/4 BSPP FLOW CONTROL VALVES - PRESSURE COMPENSATED - DOUBLE CUT

The fixed compensated flow control valve F1T (1/4 G) is used to keep the descent speed of a load constant, regardless of the operating pressure and the value of the load. Typical use is related to tail lifts and hydraulic platforms. They are protected externally by a manganese phosphating treatment.

HYDRAULIC CIRCUIT

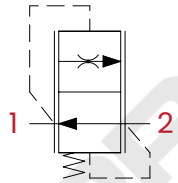

CODE

33300011

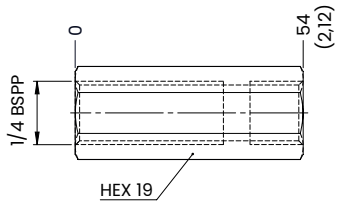

CODE

33300027

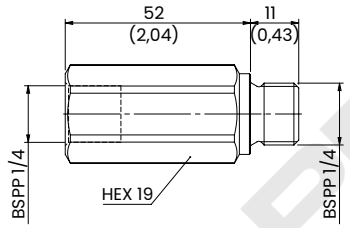

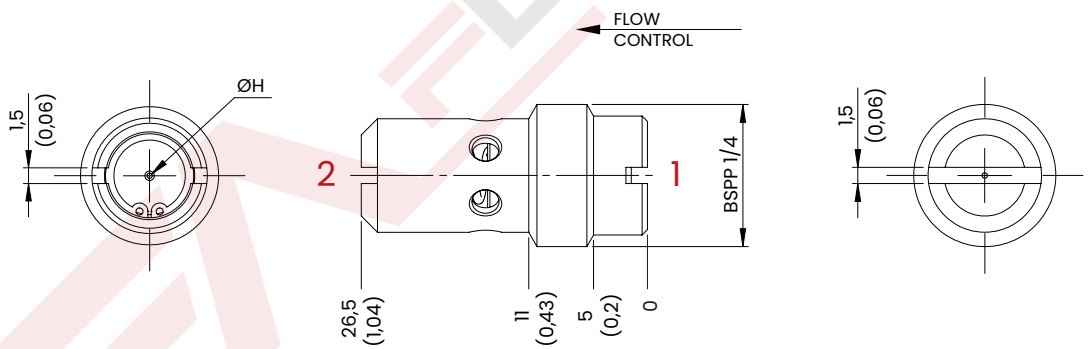

mm [Inches]

ORDERING CODE

CODE	TYPE	CAVITY	CONTROLLED FLOW AT 100 bar ± 10% l/min [USgpm]	Ø H mm [Inches]	MAX PRESSURE bar [PSI]	TIGHTENING TORQUE Nm [lbt ft]	WEIGHT kg [lb]
FA4067	F1T01	FC105 1/4 BSPP See cavity paragraph p. 230	1 [0,26]	1 [0,04]	250 [3625]	4 [3]	0,014 [0,031]
FA4068	F1T02		2 [0,53]	1,2 [0,05]			
FA4069	F1T03		3 [0,79]	1,5 [0,06]			
FA4070	F1T04		4 [1,06]	1,7 [0,07]			
FA4071	F1T05		5 [1,32]	1,9 [0,07]			
FA4072	F1T06		6 [1,58]	2,1 [0,08]			
FA4073	F1T07		7 [1,85]	2,3 [0,09]			
FA4074	F1T08		8 [2,11]	2,4 [0,09]			
FA4075	F1T09		9 [2,38]	2,7 [0,11]			
FA4076	F1T10		10 [2,64]	2,8 [0,11]			
FA4077	F1T11		11 [2,90]	3,1 [0,12]			
FA4078	F1T12		12 [3,17]	3,3 [0,13]			
FA4079	F1T15		15 [3,96]	5 [0,20]			

UPDATE. March 2023 (v.01)

Mineral oil: DIN 51524 ISO 6743/4 | Oil viscosity: 15 to 250 cSt 15-250 mm2/s | Oil temperature: -4°F + 176°F -20°C +80°C | Ambient temperature: -4°F + 122°F -20°C +50°C | Max contamination index with filter: 5 to 250 cSt 15-250 mm2/s | It is necessary a filter use to protect the valve (advised filtration 15 µm)

Via Guadiana n° 8/1, 42124 Reggio Emilia - ITALY | www.fluid-app.it | sales@fluid-app.it

F1E *FLOW CONTROL 1/4 BSPP*

1/4 BSPP FLOW CONTROL VALVES - PRESSURE COMPENSATED

The fixed compensated flow control valve F1E (1/4 G) is used to keep the descent speed of a load constant, regardless of the operating pressure and the value of the load. Typical use is related to tail lifts and hydraulic platforms.
They are protected externally by a manganese phosphating treatment.

HYDRAULIC CIRCUIT

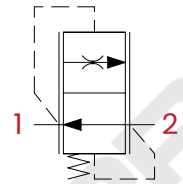

CODE

33300011

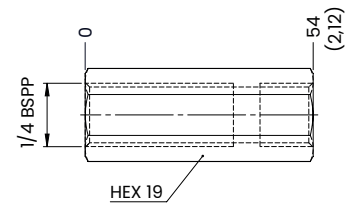

CODE

33300027

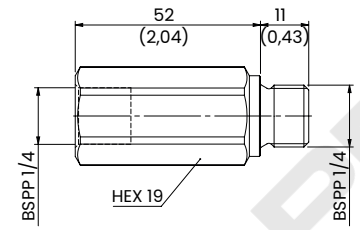

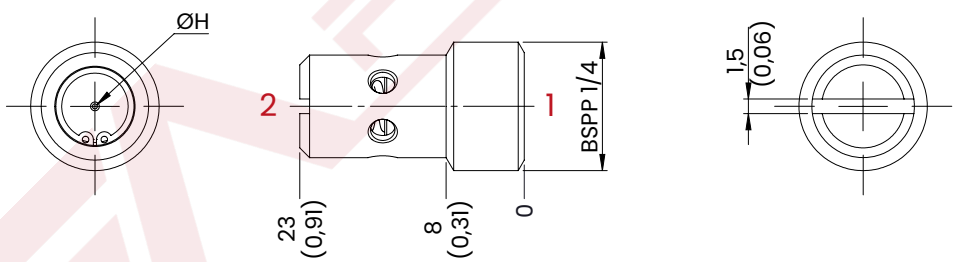

mm [Inches]

ORDERING CODE

CODE	TYPE	CAVITY	CONTROLLED FLOW AT 100 bar ± 10% l/min [USgpm]	Ø H mm [Inches]	MAX PRESSURE bar [PSI]	TIGHTENING TORQUE Nm [lbt ft]	WEIGHT kg [lb]
FA4192	F1E01	FC105 1/4 BSPP See cavity paragraph p. 230	1 [0,26]	1 [0,04]	250 [3625]	4 [3]	0,014 [0,031]
FA4193	F1E02		2 [0,53]	1,2 [0,05]			
FA4194	F1E03		3 [0,79]	1,5 [0,06]			
FA4195	F1E04		4 [1,06]	1,7 [0,07]			
FA4196	F1E05		5 [1,32]	1,9 [0,07]			
FA4197	F1E06		6 [1,58]	2,1 [0,08]			
FA4198	F1E07		7 [1,85]	2,3 [0,09]			
FA4199	F1E08		8 [2,11]	2,4 [0,09]			
FA4200	F1E09		9 [2,38]	2,7 [0,11]			
FA4201	F1E10		10 [2,64]	2,8 [0,11]			
FA4202	F1E11		11 [2,90]	3,1 [0,12]			
FA4203	F1E12		12 [3,17]	3,3 [0,13]			
FA4204	F1E15		15 [3,96]	5 [0,20]			

UPDATE. Sept. 2024 (v.01)

Mineral oil: DIN 51524 ISO 6743/4 | Oil viscosity: 15 to 250 cSt 15-250 mm2/s | Oil temperature: -4°F + 176°F -20°C +80°C | Ambient temperature: -4°F + 122°F -20°C +50°C | Max contamination index with filter: 5 to 250 cSt 15-250 mm2/s | It is necessary a filter use to protect the valve (advised filtration 15 µm)

Via Guadiana n° 8/1, 42124 Reggio Emilia - ITALY | www.fluid-app.it | sales@fluid-app.it

F1C FLOW CONTROL Ø 12,7

D. 12.7 FLOW CONTROL VALVES-PRESSURE COMPENSATED

The fixed compensated flow control valve F1C (d. 12.7) is used to keep the descent speed of a load constant, regardless of the operating pressure and the value of the load. They are protected externally by a manganese phosphating treatment

HYDRAULIC CIRCUIT

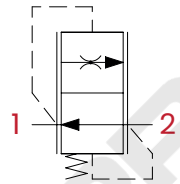

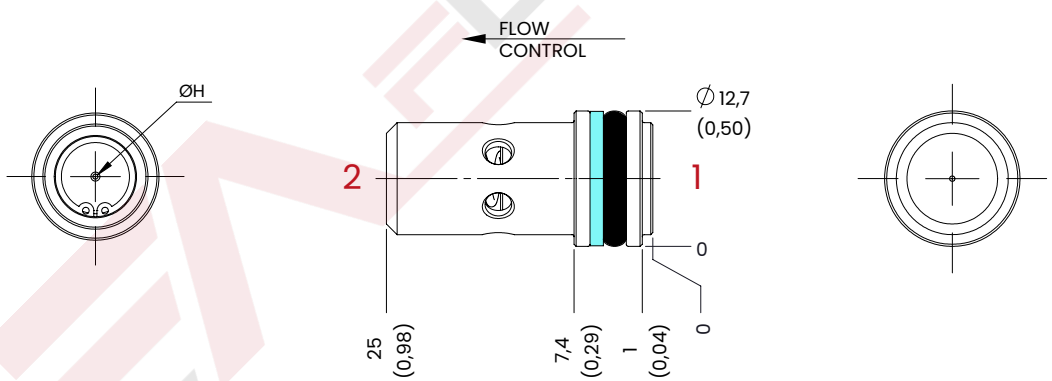

mm [Inches]

ORDERING CODE

CODE	TYPE	CONTROLLED FLOW AT 100 bar ± 10% l/min [USgpm]	Ø H mm [Inches]	MAX PRESSURE bar [PSI]	WEIGHT kg [lb]
FA4080	F1C01	1 [0,26]	1 [0,04]	250 [3625]	0,014 [0,031]
FA4081	F1C02	2 [0,53]	1,2 [0,05]		
FA4082	F1C03	3 [0,79]	1,5 [0,06]		
FA4083	F1C04	4 [1,06]	1,7 [0,07]		
FA4084	F1C05	5 [1,32]	1,9 [0,07]		
FA4085	F1C06	6 [1,58]	2,1 [0,08]		
FA4086	F1C07	7 [1,85]	2,3 [0,09]		
FA4087	F1C08	8 [2,11]	2,4 [0,09]		
FA4088	F1C09	9 [2,38]	2,7 [0,11]		
FA4089	F1C10	10 [2,64]	2,8 [0,11]		
FA4090	F1C11	11 [2,90]	3,1 [0,12]		
FA4091	F1C12	12 [3,17]	3,3 [0,13]		
FA4092	F1C15	15 [3,96]	5 [0,20]		

UPDATE. April 2023 (v.02)

Mineral oil: DIN 51524 ISO 6743/4 | Oil viscosity: 15 to 250 cSt 15-250 mm2/s | Oil temperature: -4°F + 176°F -20°C +80°C | Ambient temperature: -4°F + 122°F -20°C +50°C | Max contamination index with filter: 5 to 250 cSt 15-250 mm2/s | It is necessary a filter use to protect the valve (advised filtration 15 µm)

Via Guadiana n° 8/1, 42124 Reggio Emilia - ITALY | www.fluid-app.it | sales@fluid-app.it

F2B *FLOW CONTROL 3/8 BSPP*

3/8 BSPP FLOW CONTROL VALVES - PRESSURE COMPENSATED

The fixed compensated flow control valve F2B (3/8 G) is used to keep the descent speed of a load constant, regardless of the operating pressure and the value of the load. Typical use is related to tail lifts and hydraulic platforms. They are protected externally by a manganese phosphating treatment

HYDRAULIC CIRCUIT

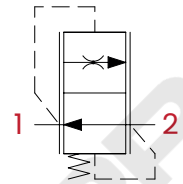

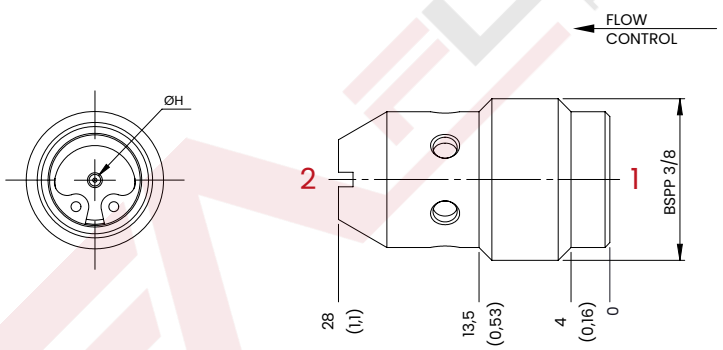

mm [Inches]

CODE

33300028

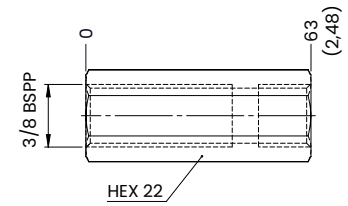

CODE

33300029

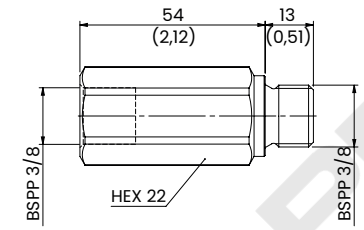

ORDERING CODE

CODE	TYPE	CAVITY	CONTROLLED FLOW AT 100 bar ± 10% l/min [USgpm]	Ø H mm [Inches]	MAX PRESSURE bar [PSI]	TIGHTENING TORQUE Nm [lbt ft]	WEIGHT kg [lb]
FA4014	F2B01	FC106 1/4 BSPP See cavity paragraph p. 230	1 [0,26]	0,6 [0,02]	250 [3625]	5 [4]	0,024 [0,053]
FA4015	F2B02		2 [0,53]	1,4 [0,06]			
FA4016	F2B03		3 [0,79]	1,7 [0,07]			
FA4017	F2B04		4 [1,06]	2,1 [0,08]			
FA4018	F2B05		5 [1,32]	2,3 [0,09]			
FA4019	F2B06		6 [1,58]	2,6 [0,10]			
FA4020	F2B07		7 [1,89]	2,8 [0,11]			
FA4021	F2B08		8 [2,11]	3,1 [0,12]			
FA4022	F2B09		9 [2,38]	3,3 [0,13]			
FA4023	F2B10		10 [2,64]	3,5 [0,14]			
FA4024	F2B11		11 [2,90]	3,7 [0,15]			
FA4025	F2B12		12 [3,17]	4 0,16]			
FA4026	F2B16		16 [4,22]	5,2 [0,2]			
FA4027	F2B18		18 [4,75]	5,8 [0,23]			

UPDATE. March 2023 (v.04)

Mineral oil: DIN 51524 ISO 6743/4 | Oil viscosity: 15 to 250 cSt 15-250 mm2/s | Oil temperature: -4°F + 176°F -20°C +80°C | Ambient temperature: -4°F + 122°F -20°C +50°C | Max contamination index with filter: 5 to 250 cSt 15-250 mm2/s | It is necessary a filter use to protect the valve (advised filtration 15 µm)

Via Guadiana n° 8/1, 42124 Reggio Emilia - ITALY | www.fluid-app.it | sales@fluid-app.it

VBA HOSE BURST BSPP

HOSE BURST VALVES

The VBA hose burst are mounted directly on the cylinder to avoid an uncontrolled descent of the load in the event of a hose break. They are protected externally by a manganese phosphating treatment

HYDRAULIC CIRCUIT

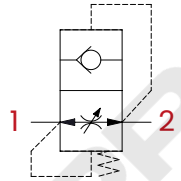

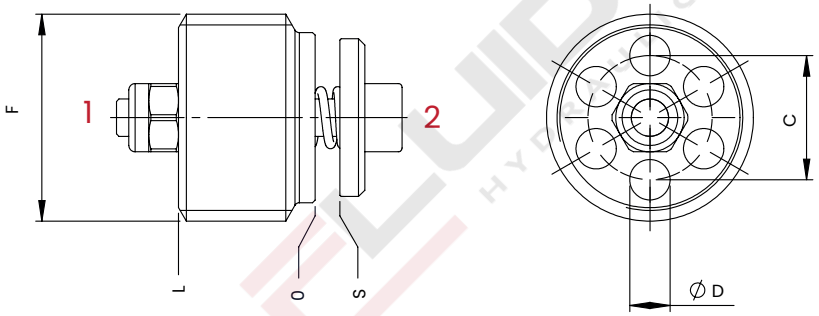

HOUSING

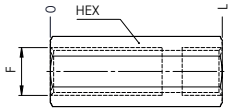

CODE	F ports	L	HEX
33300026	1/4 BSPP	61 [2,40]	19 [0,75]
33300028	3/8 BSPP	63 [2,48]	22 [0,87]
33300015	1/2 BSPP	62 [2,44]	27 [1,06]
33300025	3/4 BSPP	75 [2,95]	32 [1,26]

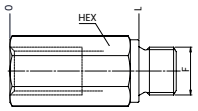

CODE	F ports	L	HEX
33300018	1/4 BSPP	39 [1,53]	19 [0,75]
33300019	3/8 BSPP	45 [1,77]	22 [0,87]
33300021	1/2 BSPP	52 [2,04]	27 [1,06]
33300024	3/4 BSPP	59 [2,32]	32 [1,26]

TOOL

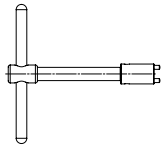

CODE	TYPE	WEIGHT kg lbt
CHI01	VBA1B	0,12 [0,27]
CHI02	VBA2B	0,13 [0,29]
CHI03	VBA3B	0,15 [0,33]
CHI04	VBA4B	0,20 [0,44]

PERFORMANCES

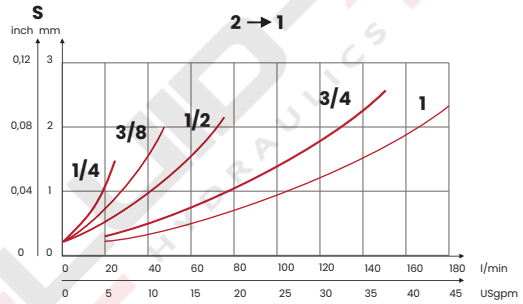

TECHNICAL CHARACTERISTICS

mm [Inches]

F	C	D	L
1/4 BSPP	8 [0,31]	2,5 [0,10]	8,2 [0,32]
3/8 BSPP	10 [0,39]	3,25 [0,13]	11 [0,43]
1/2 BSPP	11,5 [0,45]	4 [0,16]	13 [0,51]
3/4 BSPP	14,5 [0,57]	5,2 [0,20]	18 [0,70]
1 BSPP	19 [0,75]	7 [0,28]	20 [0,79]

ORDERING CODE

CODE	TYPE	CAVITY	F ports	MAX FLOW l/min [USgpm]	MAX PRESSURE bar [PSI]	VALVE TIGHTENING TORQUE Nm [lbt ft]	NUT TIGHTENING TORQUE FOR ADJUSTMENT Nm [lbt ft]	WEIGHT kg [lb]
FA6001	VBA1B	FC100	1/4 BSPP	25 [6,6]	350 [5075]	4 [3]	1 [0,7]	0,008 [0,017]
FA6002	VBA2B	FC101	3/8 BSPP	50 [13,2]		6 [4,5]		0,014 [0,030]
FA6003	VBA3B	FC102	1/2 BSPP	80 [21,1]		10 [7,5]	2 [1,5]	0,025 [0,055]
FA6004	VBA4B	FC103	3/4 BSPP	150 [39,6]		15 [11]		0,05 [0,11]
FA6005	VBA5B	FC104	1 BSPP	180 [47,5]		20 [15]		0,10 [0,22]
S setting on request - hole on the plate on request								
See cavity paragraph p. 230								

UPDATE. Feb. 2024 (v.08)

Mineral oil: DIN 51524 ISO 6743/4 | Oil viscosity: 15 to 250 cSt 15-250 mm2/s | Oil temperature: -4°F + 176°F -20°C +80°C | Ambient temperature: -4°F + 122°F -20°C +50°C | Max contamination index with filter: 5 to 250 cSt 15-250 mm2/s | It is necessary a filter use to protect the valve (advised filtration 15 µm) | Max leakage in the version without hole: 0,25 cm3/min - 5 drops/min

Via Guadiana n° 8/1, 42124 Reggio Emilia - ITALY | www.fluid-app.it | sales@fluid-app.it

VBAT *HOSE BURST BSPP*

HOSE BURST VALVES

The VBAT hose burst are mounted directly on the cylinder to avoid an uncontrolled descent of the load in the event of a hose break.

HYDRAULIC CIRCUIT

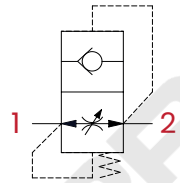

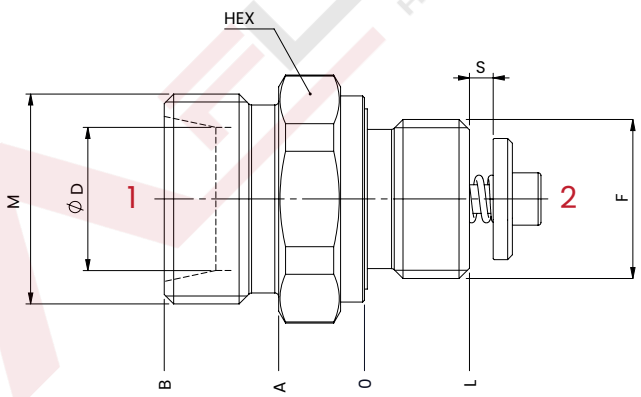

mm [Inches]

TECHNICAL CHARACTERISTICS

mm [Inches]

F	M	D	L	HEX	A	B
3/8 BSPP	M16 x 1,5	10 [0,39]	11 [0,43]	22	9 [0,35]	20 [0,78]
	M18 x 1,5	12 [0,47]				
	M22x 1,5	15 [0,59]		24		21 [0,82]
1/2 BSPP			13 [0,51]	27	9,5 [0,37]	21,5 [0,84]

PERFORMANCES

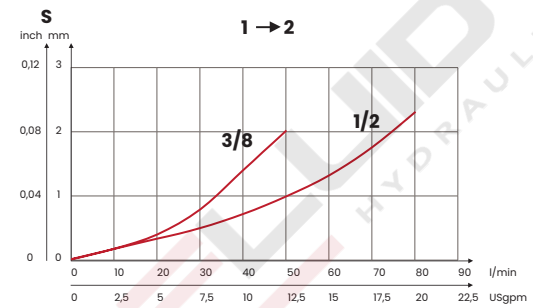

ORDERING CODE

CODE	TYPE	F ports	MAX FLOW l/min [USgpm]	MAX PRESSURE bar [PSI]	TORQUE OF TIGHTENING Nm [lbt ft]	TORQUE OF TIGHTENING TUBE Nm [lbt ft]	TORQUE OF ADJUSTMENT SCREW TIGHTENING Nm [lbt ft]	WEIGHT kg [lb]
FA6006	VBA2BT10	3/8 BSPP	50 [13.2]	320 [4641]	30 [22]	20 [15]	1 [0,7]	0,044 [0,097]
FA6007	VBA2BT12					40 [30]		
FA6008	VBA2BT15					60 [45]		0,060 [0,13]
FA6009	VBA3BT15	1/2 BSPP	80 [21.1]		50 [37]		2 [1,5]	0,077 [0,17]
S setting on request - hole on the plate on request								

UPDATE. March 2023 (v.04)

Mineral oil: DIN 51524 ISO 6743/4 | Oil viscosity: 15 to 250 cSt 15-250 mm2/s | Oil temperature: -4°F + 176°F -20°C +80°C | Ambient temperature: -4°F + 122°F -20°C +50°C | Max contamination index with filter: 5 to 250 cSt 15-250 mm2/s | It is necessary a filter use to protect the valve (advised filtration 15 µm) | Max leakage in the version without hole: 0,25 cm3/min - 5 drops/min

Via Guadiana n° 8/1, 42124 Reggio Emilia - ITALY | www.fluid-app.it | sales@fluid-app.it

CFR FLOW CONTROL BSPP

FLOW CONTROL VALVES - PRESSURE COMPENSATED

Compensated flow control valve, allows the free passage of oil in one direction and regulates the flow in the opposite direction. The internal compensation system keeps the actuator speed constant, regardless of the load, and guarantees high adjustment sensitivity.

HYDRAULIC CIRCUIT

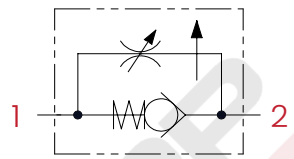

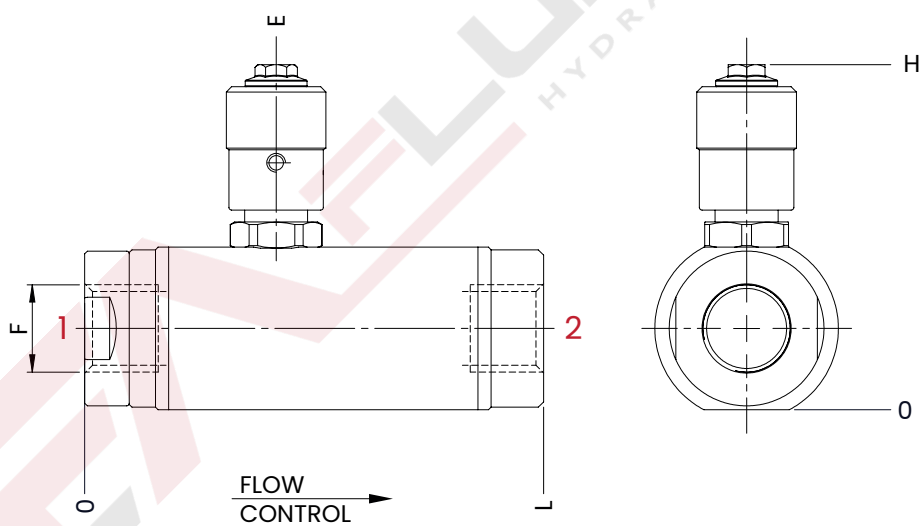

mm [Inches]

TECHNICAL CHARACTERISTICS

mm [Inches]

F	L	H	E
1/4 BSPP	87,5 [3,44]	66 [2,60]	36,5 [1,44]
3/8 BSPP			
1/2 BSPP	109 [4,31]	73 [2,87]	46 [1,81]
Steel body			

PERFORMANCES

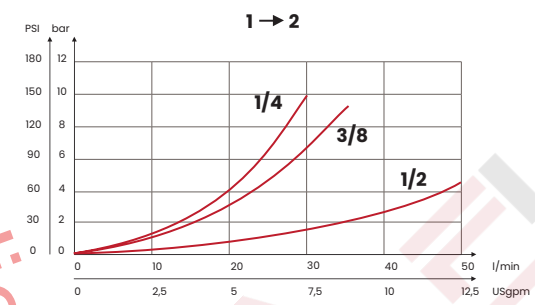

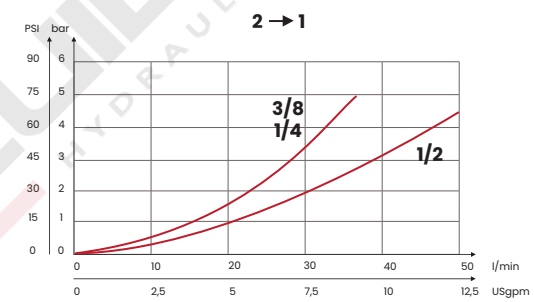

ORDERING CODE

CODE	TYPE	F ports	MAX FLOW l/min [USgpm]	MAX PRESSURE bar [PSI]	WEIGHT kg [lb]
FA4028	CFR1B	1/4 BSPP	25 [6,6]	250 [3625]	0,5 [1,10]
FA4029	CFR2B	3/8 BSPP	30 [7,9]		
FA4030	CFR3B	1/2 BSPP	45 [12]		0,8 [1,76]

UPDATE. March 2023 (v.05)

Mineral oil: DIN 51524 ISO 6743/4 | Oil viscosity: 15 to 250 cSt 15-250 mm2/s | Oil temperature: -4°F + 176°F -20°C +80°C | Ambient temperature: -4°F + 122°F -20°C +50°C | Max contamination index with filter: 5 to 250 cSt 15-250 mm2/s | It is necessary a filter use to protect the valve (advised filtration 15 µm)

Via Guadiana n° 8/1, 42124 Reggio Emilia - ITALY | www.fluid-app.it | sales@fluid-app.it

SUA FLOW CONTROL BSPP

UNIDIRECTIONAL FLOW CONTROL VALVES

The unidirectional flow control valves SUA (Gas thread) allow the free passage of the oil in one direction and regulate it in the opposite direction.

HYDRAULIC CIRCUIT

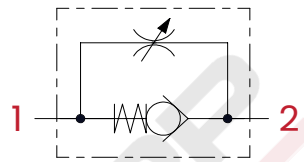

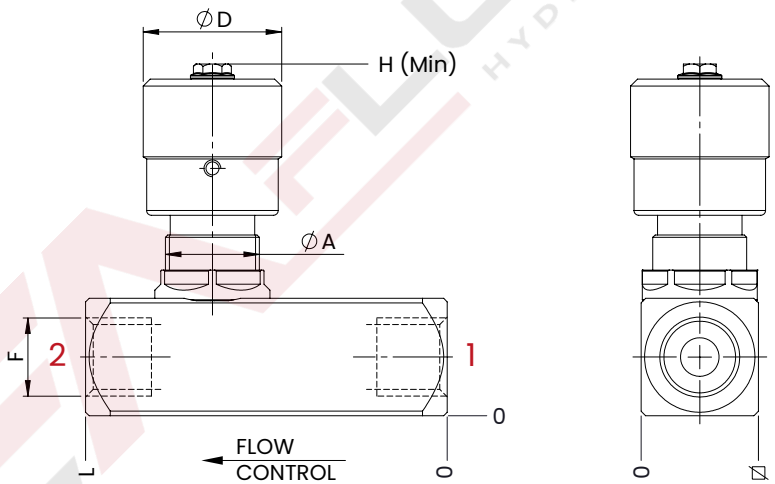

mm [Inches]

TECHNICAL CHARACTERISTICS

mm [Inches]

F	L	H	Ø	Ø D	A
1/4 BSPP	66 [2,60]	76 [2,99]	25 [0,98]	30 [1,18]	M20 x 1
3/8 BSPP	77 [3,03]				
1/2 BSPP	86 [3,38]	81 [3,19]	30 [1,18]		
3/4 BSPP	112,5 [4,43]	110 [4,33]	40 [1,57]	38 [1,5]	M35 x 1,5
1 BSPP	141 [5,55]	114 [4,49]	45 [1,77]		
Steel body					

PERFORMANCES

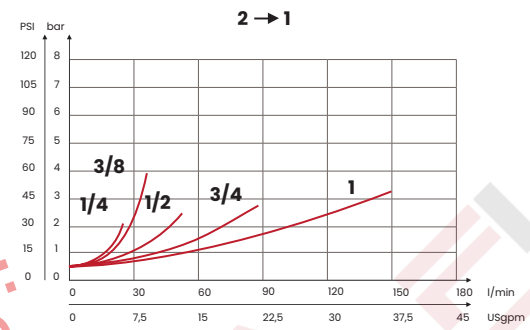

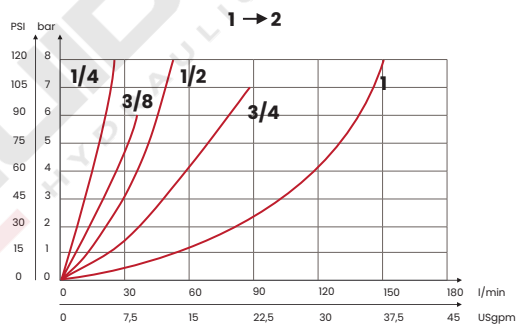

ORDERING CODE

CODE	TYPE	F ports	MAX FLOW l/min [USgpm]	MAX PRESSURE bar [PSI]	WEIGHT kg [lb]
FA4031	SUA1B	1/4 BSPP	25 [6,6]	400 [5800]	0,4 [0,88]
FA4032	SUA2B	3/8 BSPP	35 [9,3]		
FA4033	SUA3B	1/2 BSPP	50 [13,2]		0,6 [1,32]
FA4034	SUA4B	3/4 BSPP	90 [23,8]		1,45 [3,2]
FA4035	SUA5B	1 BSPP	150 [39,6]		2 [4,4]

UPDATE. Sept. 2024 (v.06)

Mineral oil: DIN 51524 ISO 6743/4 | Oil viscosity: 15 to 250 cSt 15-250 mm2/s | Oil temperature: -4°F + 176°F -20°C +80°C | Ambient temperature: -4°F + 122°F -20°C +50°C | Max contamination index with filter: 5 to 250 cSt 15-250 mm2/s | It is necessary a filter use to protect the valve (advised filtration 15 µm)

Via Guadiana n° 8/1, 42124 Reggio Emilia - ITALY | www.fluid-app.it | sales@fluid-app.it

SUD FLOW CONTROL - LOCK NUT BSPP

UNIDIRECTIONAL FLOW CONTROL VALVES

The unidirectional flow control valves SUD (Gas thread) allow the free passage of the oil in one direction and regulate it in the opposite direction.

HYDRAULIC CIRCUIT

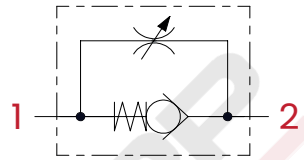

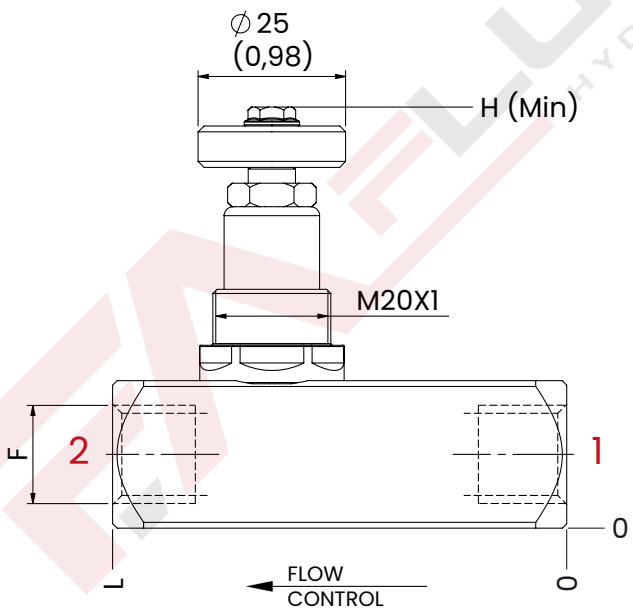

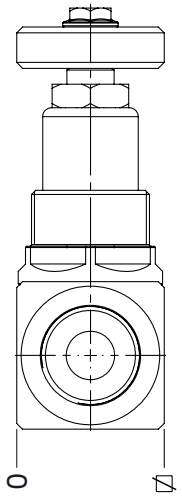

TECHNICAL CHARACTERISTICS

mm [Inches]

F	L	H	∅
1/4 BSPP	66 [2,60]	74 [2,91]	25 [0,98]
3/8 BSPP	77 [3,03]		
1/2 BSPP	86 [3,39]	79 [3,11]	30 [1,18]
Steel body			

PERFORMANCES

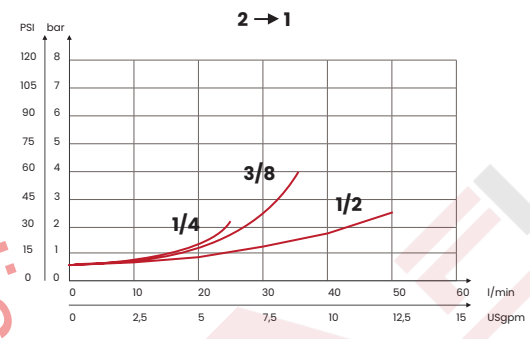

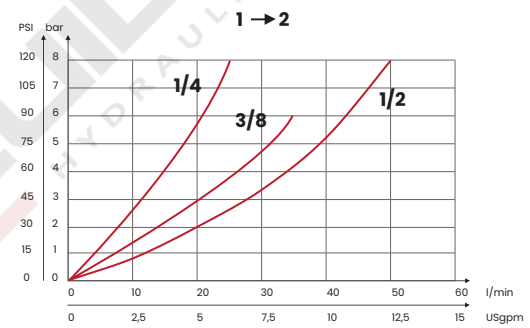

ORDERING CODE

CODE	TYPE	F ports	MAX FLOW l/min [USgpm]	MAX PRESSURE bar [PSI]	WEIGHT kg [lb]
FA4036	SUD1B	1/4 BSPP	25 [6,6]	400 [5800]	0,37 [0,82]
FA4037	SUD2B	3/8 BSPP	35 [9,3]		
FA4038	SUD3B	1/2 BSPP	50 [13,2]		0,55 [1,21]

UPDATE. July 2023 (v.06)

Mineral oil: DIN 51524 ISO 6743/4 | Oil viscosity: 15 to 250 cSt 15-250 mm2/s | Oil temperature: -4°F + 176°F -20°C +80°C | Ambient temperature: -4°F + 122°F -20°C +50°C | Max contamination index with filter: 5 to 250 cSt 15-250 mm2/s | It is necessary a filter use to protect the valve (advised filtration 15 µm)

Via Guadiana n° 8/1, 42124 Reggio Emilia - ITALY | www.fluid-app.it | sales@fluid-app.it

SBA FLOW CONTROL BSPP

BIDIRECTIONAL FLOW CONTROL VALVES

The bidirectional flow control valves SBA (Gas thread) regulate the speed of an actuator in both directions.

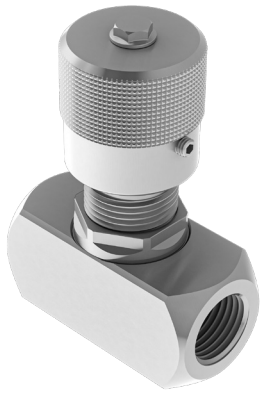

HYDRAULIC CIRCUIT

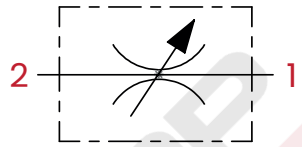

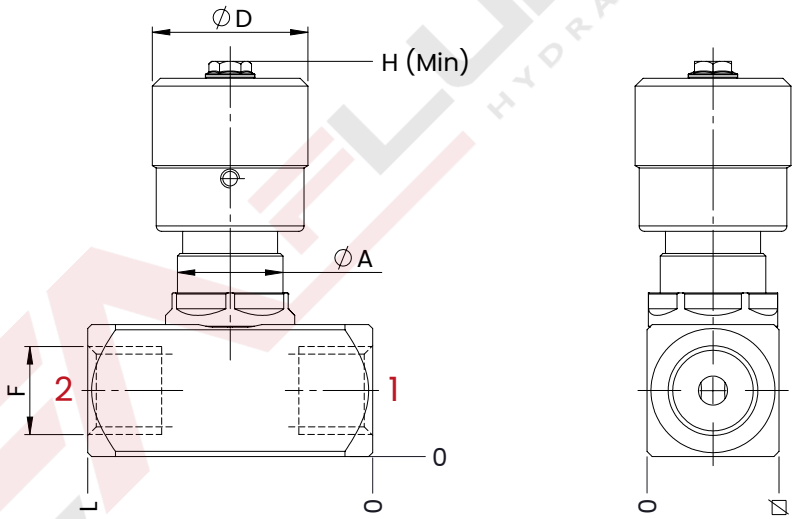

mm [Inches]

TECHNICAL CHARACTERISTICS

mm [Inches]

F	L	H	Ø	ØD	A
1/4 BSPP	54 [2,13]	76 [2,99]	25 [0,98]	30 [1,18]	M20 x 1
3/8 BSPP					
1/2 BSPP	58 [2,28]	81 [3,19]	30 [1,18]		
3/4 BSPP	81 [3,19]	110 [4,33]	40 [1,57]	38 [1,5]	M35 x 1,5
1 BSPP	102 [4,01]	114 [4,49]	45 [1,77]		
Steel body					

PERFORMANCES

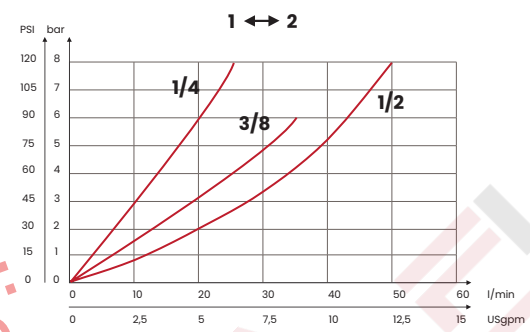

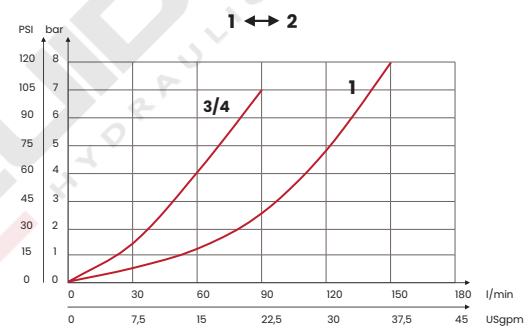

ORDERING CODE

CODE	TYPE	F ports	MAX FLOW l/min [USgpm]	MAX PRESSURE bar [PSI]	WEIGHT kg [lb]
FA4039	SBA1B	1/4 BSPP	25 [6,6]	400 [5800]	0,3 [0,66]
FA4040	SBA2B	3/8 BSPP	35 [9,3]		0,31 [0,68]
FA4041	SBA3B	1/2 BSPP	50 [13,2]		0,5 [1,1]
FA4042	SBA4B	3/4 BSPP	90 [23,8]		1,1 [2,43]
FA4043	SBA5B	1 BSPP	150 [39,6]		1,5 [3,3]

UPDATE. June 2023 (v.06)

Mineral oil: DIN 51524 ISO 6743/4 | Oil viscosity: 15 to 250 cSt 15-250 mm2/s | Oil temperature: -4°F + 176°F -20°C +80°C | Ambient temperature: -4°F + 122°F -20°C +50°C | Max contamination index with filter: 5 to 250 cSt 15-250 mm2/s | It is necessary a filter use to protect the valve (advised filtration 15 µm)

Via Guadiana n° 8/1, 42124 Reggio Emilia - ITALY | www.fluid-app.it | sales@fluid-app.it

SBD FLOW CONTROL - LOCK NUT BSPP

BIDIRECTIONAL FLOW CONTROL VALVES

The bidirectional flow control valves SBD (Gas thread) regulate the speed of an actuator in both directions.

HYDRAULIC CIRCUIT

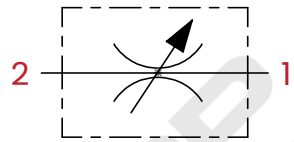

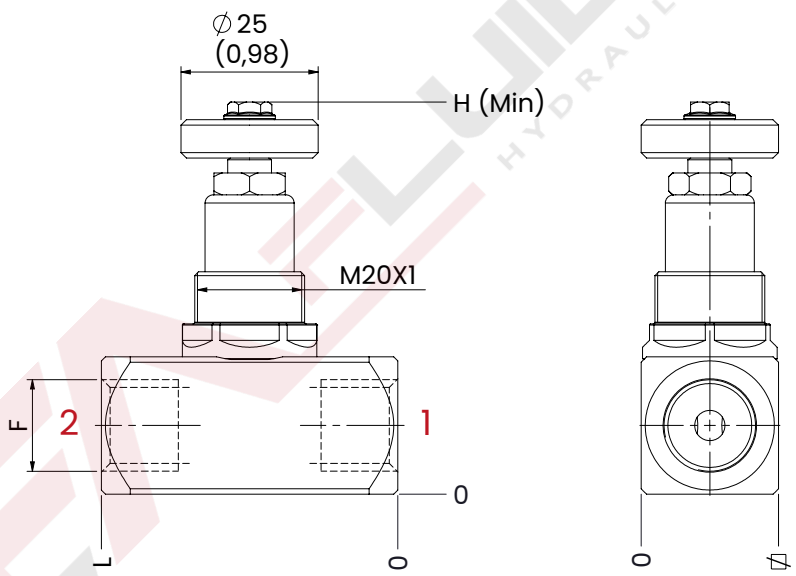

mm [Inches]

TECHNICAL CHARACTERISTICS

mm [Inches]

F	L	H	∅
1/4 BSPP	54 [2,13]	74 [2,91]	25 [0,98]
3/8 BSPP			
1/2 BSPP	58 [2,28]	79 [3,11]	30 [1,18]
Steel body			

PERFORMANCES

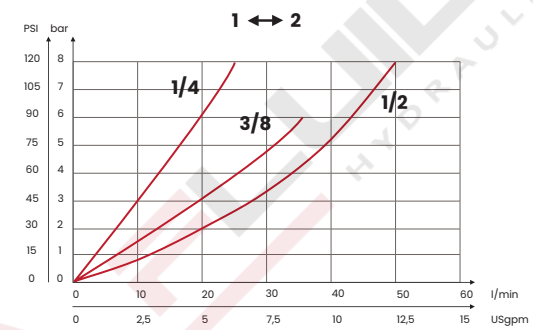

ORDERING CODE

CODE	TYPE	F ports	MAX FLOW l/min [USgpm]	MAX PRESSURE bar [PSI]	WEIGHT kg [lb]
FA4044	SBD1B	1/4 BSPP	25 [6,6]	400 [5800]	0,30 [0,66]
FA4045	SBD2B	3/8 BSPP	35 [9,3]		0,28 [0,6]
FA4046	SBD3B	1/2 BSPP	50 [13,2]		0,45 [1]

UPDATE. July 2023 (v.05)

Mineral oil: DIN 51524 ISO 6743/4 | Oil viscosity: 15 to 250 cSt 15-250 mm2/s | Oil temperature: -4°F + 176°F -20°C +80°C | Ambient temperature: -4°F + 122°F -20°C +50°C | Max contamination index with filter: 5 to 250 cSt 15-250 mm2/s | It is necessary a filter use to protect the valve (advised filtration 15 µm)

Via Guadiana n° 8/1, 42124 Reggio Emilia - ITALY | www.fluid-app.it | sales@fluid-app.it

VCU FLOW CONTROL BSPP

UNIDIRECTIONAL FLOW CONTROL VALVES

The unidirectional flow control valves VCU (Gas thread) allow the free passage of the oil in one direction and regulate it in the opposite direction.

HYDRAULIC CIRCUIT

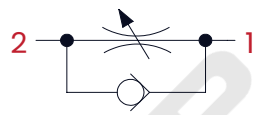

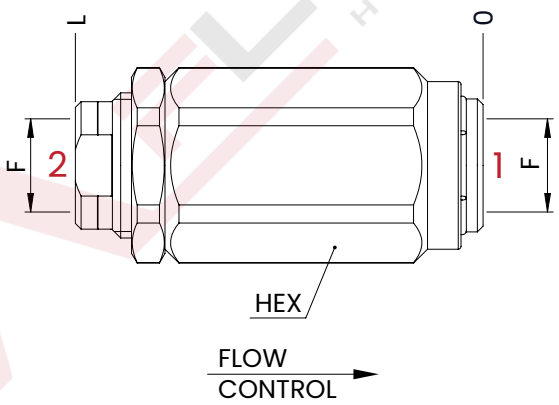

mm [Inches]

TECHNICAL CHARACTERISTICS

mm [Inches]

F	HEX	L
1/4 BSPP	28 [1,10]	64 [2,52]
3/8 BSPP	32 [1,26]	73 [2,87]
1/2 BSPP	38 [1,5]	83 [3,27]
3/4 BSPP	46 [1,8]	102 [4,01]
1 BSPP	55 [2,2]	124,5 [4,90]
Steel body		

PERFORMANCES

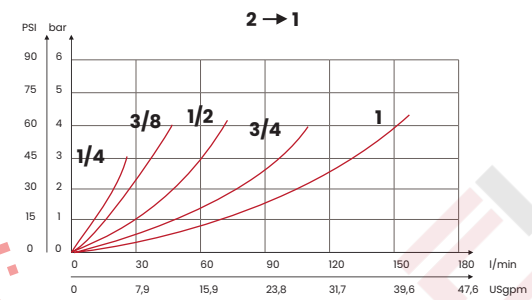

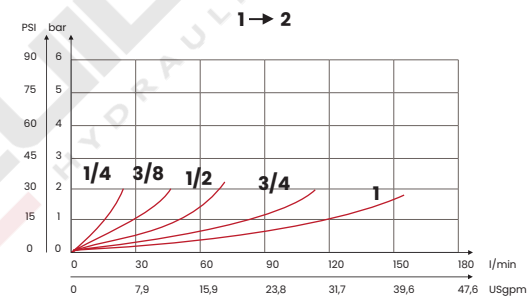

ORDERING CODE

CODE	TYPE	F ports	MAX FLOW l/min [USgpm]	MAX PRESSURE bar [PSI]	WEIGHT kg [lb]
FA4047	VCU1B	1/4 BSPP	25 [6,7]	350 [5075]	0,23 [0,5]
FA4048	VCU2B	3/8 BSPP	45 [12]		0,34 [0,75]
FA4049	VCU3B	1/2 BSPP	70 [18,7]		0,51 [1,12]
FA4155	VCU4B	3/4 BSPP	110 [29,3]	250 [3625]	0,89 [1,90]
FA4156	VCU5B	1 BSPP	160 [42,7]		1,5 [3,3]

UPDATE. Jan. 2024 (v.03)

Mineral oil: DIN 51524 ISO 6743/4 | Oil viscosity: 15 to 250 cSt 15-250 mm2/s | Oil temperature: -4°F + 176°F -20°C +80°C | Ambient temperature: -4°F + 122°F -20°C +50°C | Max contamination index with filter: 5 to 250 cSt 15-250 mm2/s | It is necessary a filter use to protect the valve (advised filtration 15 µm)

Via Guadiana n° 8/1, 42124 Reggio Emilia - ITALY | www.fluid-app.it | sales@fluid-app.it

VCB *FLOW CONTROL BSPP*

BIDIRECTIONAL FLOW CONTROL VALVES

The bidirectional flow control valves VCB (Gas thread) regulate the speed of an actuator in both directions

HYDRAULIC CIRCUIT

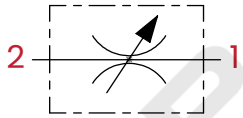

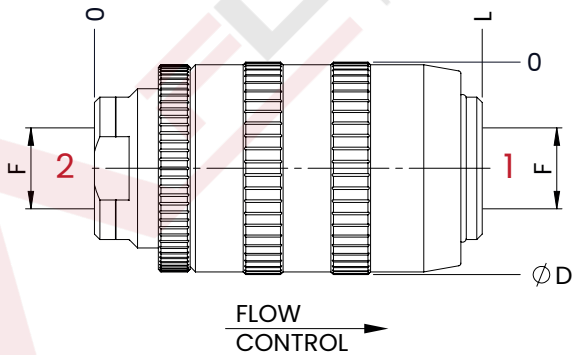

mm [Inches]

TECHNICAL CHARACTERISTICS

mm [Inches]

F	Ø D	L
1/4 BSPP	34 [1,34]	62 [2,44]
3/8 BSPP	40 [1,57]	73 [2,87]
1/2 BSPP	45 [1,77]	83 [3,27]
Steel body		

PERFORMANCES

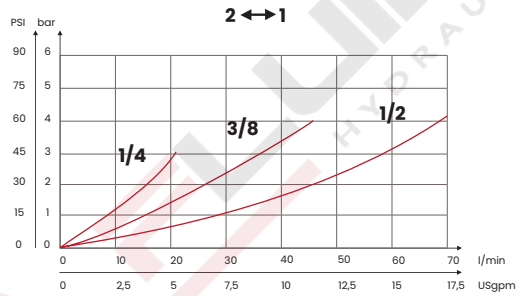

ORDERING CODE

CODE	TYPE	F ports	MAX FLOW l/min [USgpm]	MAX PRESSURE bar [PSI]	WEIGHT kg [lb]
FA4050	VCB1B	1/4 BSPP	20 [5,3]	350 [5075]	0,30 [0,66]
FA4051	VCB2B	3/8 BSPP	45 [12]		0,48 [1,06]
FA4052	VCB3B	1/2 BSPP	70 [18,6]		0,67 [1,47]

UPDATE. March 2023 (v.05)

Mineral oil: DIN 51524 ISO 6743/4 | Oil viscosity: 15 to 250 cSt 15-250 mm2/s | Oil temperature: -4°F + 176°F -20°C +80°C | Ambient temperature: -4°F + 122°F -20°C +50°C | Max contamination index with filter: 5 to 250 cSt 15-250 mm2/s | It is necessary a filter use to protect the valve (advised filtration 15 µm)

Via Guadiana n° 8/1, 42124 Reggio Emilia - ITALY | www.fluid-app.it | sales@fluid-app.it

RCT *FLOW CONTROL BSPP*

3 WAYS FLOW CONTROL VALVES - PRESSURE COMPENSATED WITH EXCEEDING FLOW TO TANK

The 3-way flow control valves allow the regulation and constant maintenance of the flow regardless of the load, by means of an internal compensation system, in the RCT version the excess flow goes to the drain.

HYDRAULIC CIRCUIT

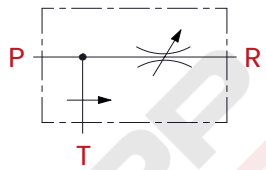

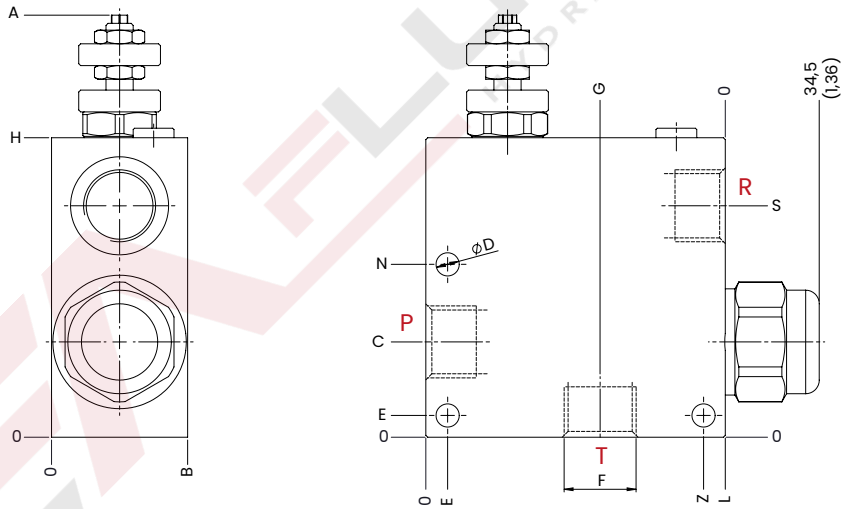

mm [Inches]

TECHNICAL CHARACTERISTICS

mm [Inches]

F	B	H	L	ØD	N	C	E	S	G	Z	A
3/8 BSPP	40 [1,57]	90 [3,54]	90 [3,54]	6,5 [0,26]	54 [2,13]	31 [1,22]	6 [0,24]	73 [2,87]	40 [1,57]	70 [2,76]	134 [5,28]
1/2 BSPP											
3/4 BSPP	50 [1,97]	110 [4,33]	110 [4,33]	8,5 [0,33]	63,5 [2,50]	35 [1,38]	8 [0,31]	85 [3,35]	44 [1,73]	96 [3,78]	155 [6,10]
1 BSPP					/	46 [1,81]	10 [0,39]	86 [3,39]	45 [1,77]	98 [3,86]	
Aluminium body											

PERFORMANCES

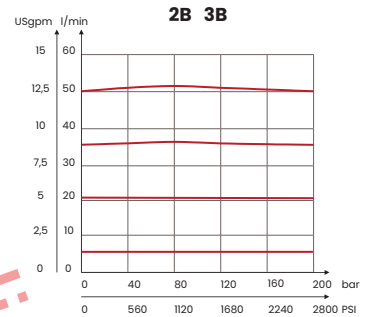

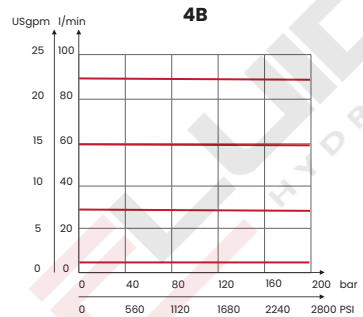

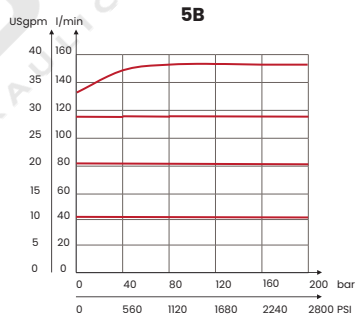

ORDERING CODE

CODE	TYPE	F ports	MAX FLOW l/min [USgpm]	MAX PRESSURE bar [PSI]	WEIGHT kg [lb]
FA4053	RCT2B	3/8 BSPP	50 [13,3] with 30 [7,9] in R	210 [3050]	1,15 [2,54]
FA4054	RCT3B	1/2 BSPP	90 [23,8] with 50 [13,3] in R		1,1 [2,43]
FA4055	RCT4B	3/4 BSPP	150 [39,6] with 90 [23,8] in R		1,9 [4,19]
FA4056	RCT5B	1 BSPP	240 [63,4] with 150 [63,4] in R		2 [4,41]

UPDATE. March 2023 (v.05)

Mineral oil: DIN 51524 ISO 6743/4 | Oil viscosity: 15 to 250 cSt 15-250 mm2/s | Oil temperature: -4°F + 176°F -20°C +80°C | Ambient temperature: -4°F + 122°F -20°C +50°C | Max contamination index with filter: 5 to 250 cSt 15-250 mm2/s | It is necessary a filter use to protect the valve (advised filtration 15 µm)

Via Guadiana n° 8/1, 42124 Reggio Emilia - ITALY | www.fluid-app.it | sales@fluid-app.it

RCP FLOW CONTROL BSPP

3 WAYS FLOW CONTROL VALVES - PRESSURE COMPENSATED WITH EXCEEDING FLOW TO PRESSURE

The 3-way flow control valves allow the regulation and constant maintenance of the flow regardless of the load, by means of an internal compensation system, in the RCP version the excess flow it is under pressure available for a second use.

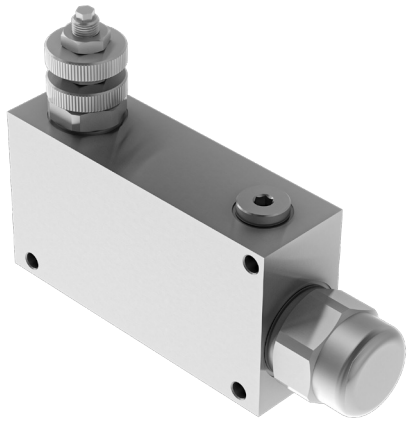

HYDRAULIC CIRCUIT

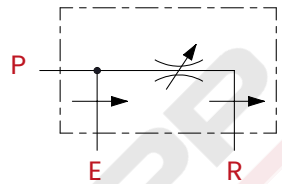

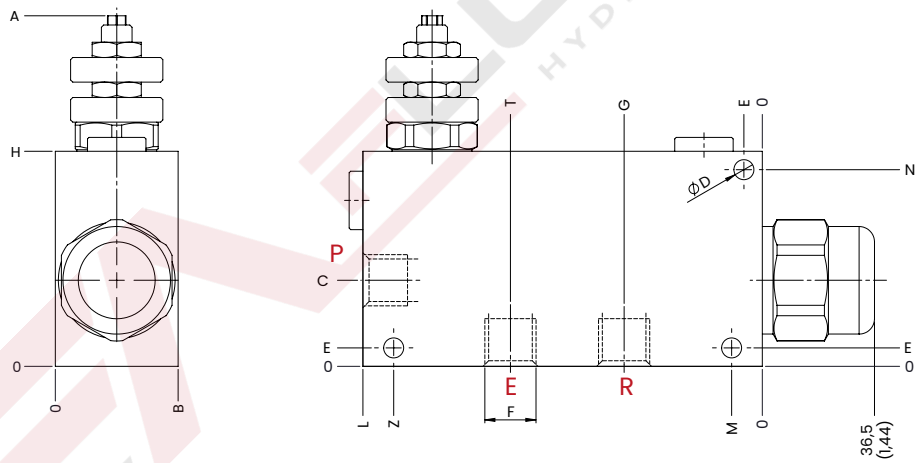

mm [Inches]

TECHNICAL CHARACTERISTICS

mm [Inches]

F	B	H	L	Ø D	N	C	E	T	G	Z	A	M
3/8 BSPP	40 [1,57]	70 [2,76]	130 [5,11]	6,5 [0,26]	64 [2,52]	28 [1,10]	6 [0,24]	82 [3,23]	45 [1,77]	120 [4,72]	114 [4,49]	10 [0,39]
1/2 BSPP												
3/4 BSPP	50 [1,97]	90 [3,54]	155 [6,10]	9,5 [0,37]	80 [3,15]	35 [1,38]	10 [0,39]	98 [3,86]	54 [2,13]	145 [5,71]	135 [5,32]	/
Aluminium body												

PERFORMANCES

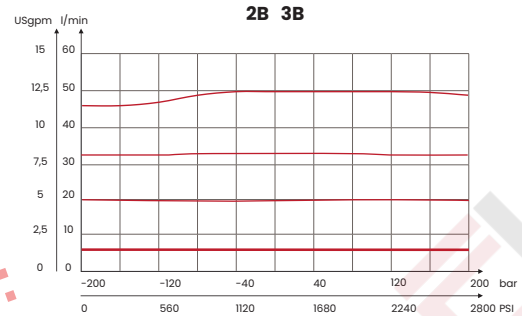

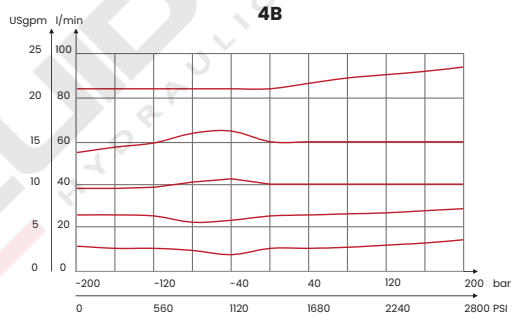

ORDERING CODE

CODE	TYPE	F ports	MAX FLOW l/min [USgpm]	MAX PRESSURE bar [PSI]	WEIGHT kg [lb]
FA4057	RCP2B	3/8 BSPP	50 [13,3] with 30 [7,9] in R	210 [3050]	1,3 [2,87]
FA4058	RCP3B	1/2 BSPP	90 [23,8] with 50 [13,3] in R		1,25 [2,76]
FA4059	RCP4B	3/4 BSPP	150 [39,6] with 90 [23,8] in R		2,5 [5,51]

UPDATE. May 2024 (v.06)

Mineral oil: DIN 51524 ISO 6743/4 | Oil viscosity: 15 to 250 cSt 15-250 mm2/s | Oil temperature: -4°F + 176°F -20°C +80°C | Ambient temperature: -4°F + 122°F -20°C +50°C | Max contamination index with filter: 5 to 250 cSt 15-250 mm2/s | It is necessary a filter use to protect the valve (advised filtration 15 µm)

Via Guadiana n° 8/1, 42124 Reggio Emilia - ITALY | www.fluid-app.it | sales@fluid-app.it

VBD CHECK VALVES BSPP

DOUBLE ACTING PILOT CHECK VALVES

VBD pilot check valves are used to lock a double acting actuator in place in both directions, ensuring the load is locked

HYDRAULIC CIRCUIT

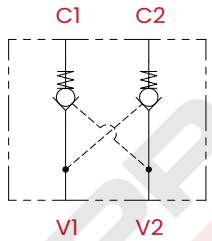

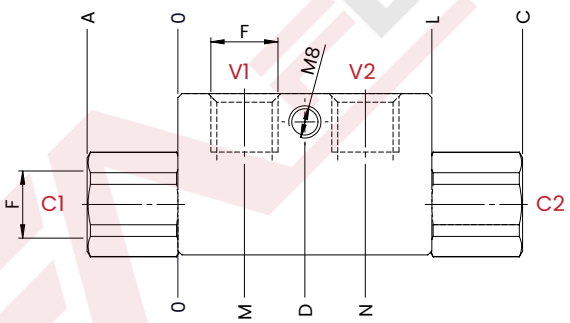

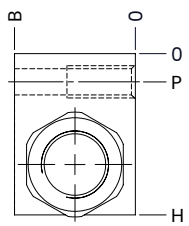

mm [Inches]

TECHNICAL CHARACTERISTICS

mm [Inches]

F	B	H	L	M	N	P	A	C	D
1/4 BSPP	30 [1,18]	40 [1,57]	63 [2,5]	13,5 [0,53]	49,5 [1,95]	7 [0,28]	22,5 [0,65]	85,5 [3,4]	31,5 [0,24]
3/8 BSPP				14,5 [0,57]	48,5 [1,90]				
1/2 BSPP	35 [1,38]	50 [2,0]	82 [3,23]	23 [0,90]	59 [2,32]	15 [0,59]	31,5 [1,24]	113,5 [4,5]	41 [1,61]
Steel body									

PERFORMANCES

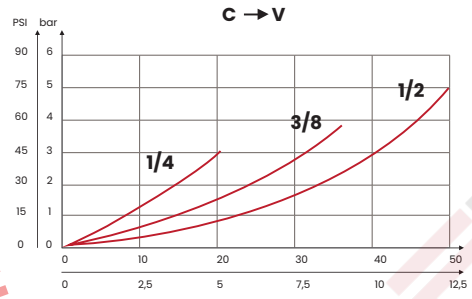

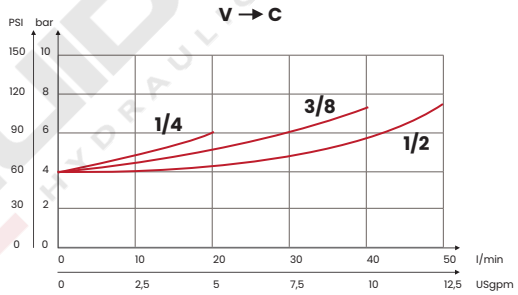

ORDERING CODE

CODE	TYPE	F ports	MAX FLOW l/min [USgpm]	MAX PRESSURE bar [PSI]	PILOT RATIO	CRACKING PRESSURE bar [PSI]	WEIGHT kg [lb]
FA5001	VBD1B	1/4 BSPP	20 [5,3]	350 [5075]	1:5,5	4,5 [65]	0,65 [1,43]
FA5002	VBD2B	3/8 BSPP	35 [9,2]				0,6 [1,32]
FA5003	VBD3B	1/2 BSPP	50 [13,2]		1:5		1,1 [2,43]
Available with spring 3 bar, 6 bar							

UPDATE. Sept. 2024 (v.06)

Mineral oil: DIN 51524 ISO 6743/4 | Oil viscosity: 15 to 250 cSt 15-250 mm2/s | Oil temperature: -4°F + 176°F -20°C +80°C | Ambient temperature: -4°F + 122°F -20°C +50°C | Max contamination index with filter: 5 to 250 cSt 15-250 mm2/s | It is necessary a filter use to protect the valve (advised filtration 15 µm) | Max leakage: 0,25 cm3/min - 5 drops/min

Via Guadiana n° 8/1, 42124 Reggio Emilia - ITALY | www.fluid-app.it | sales@fluid-app.it

VBS CHECK VALVES BSPP

SINGLE ACTING PILOT CHECK VALVES

The VBS pilot check valves are used to lock a single acting actuator in position, ensuring that the load is locked.

HYDRAULIC CIRCUIT

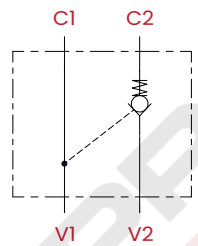

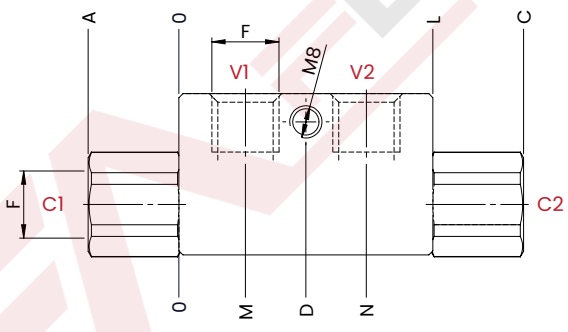

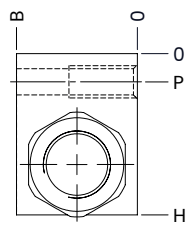

mm [Inches]

TECHNICAL CHARACTERISTICS

mm [Inches]

F	B	H	L	M	N	P	A	C	D
1/4 BSPP	30 [1,18]	40 [1,57]	63 [2,5]	13,5 [0,53]	49,5 [1,95]	7 [0,28]	22,5 [0,65]	85,5 [3,4]	31,5 [0,24]
3/8 BSPP				14,5 [0,57]	48,5 [1,90]				
1/2 BSPP	35 [1,38]	50 [2,0]	82 [3,23]	23 [0,90]	59 [2,32]	15 [0,59]	31,5 [1,24]	113,5 [4,5]	41 [1,61]
Steel body									

PERFORMANCES

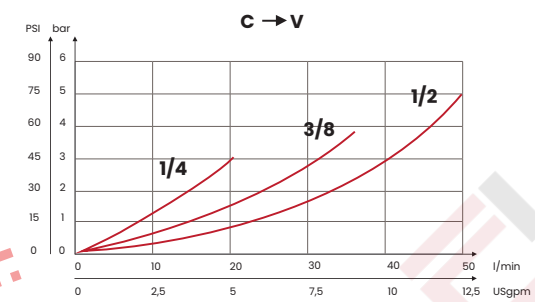

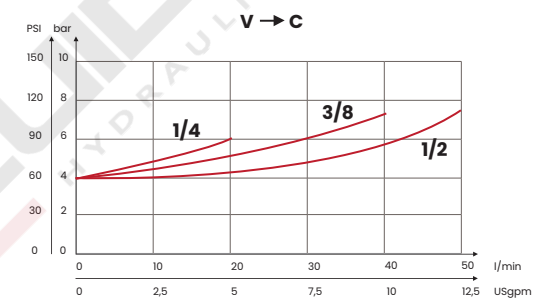

ORDERING CODE

CODE	TYPE	F ports	MAX FLOW l/min [USgpm]	MAX PRESSURE bar [PSI]	PILOT RATIO	CRACKING PRESSURE bar [PSI]	WEIGHT kg [lb]
FA5004	VBS1B	1/4 BSPP	20 [5,3]	350 [5075]	1:5,5	4,5 [65]	0,61 [1,34]
FA5005	VBS2B	3/8 BSPP	35 [9,2]				0,58 [1,28]
FA5006	VBS3B	1/2 BSPP	50 [13,2]		1:5		1,04 [2,29]
Available with spring 3 bar, 6 bar							

UPDATE. Sept. 2024 (v.07)

Mineral oil: DIN 51524 ISO 6743/4 | Oil viscosity: 15 to 250 cSt 15-250 mm2/s | Oil temperature: -4°F + 176°F -20°C +80°C | Ambient temperature: -4°F + 122°F -20°C +50°C | Max contamination index with filter: 5 to 250 cSt 15-250 mm2/s | It is necessary a filter use to protect the valve (advised filtration 15 µm) | Max leakage: 0,25 cm3/min - 5 drops/min

Via Guadiana n° 8/1, 42124 Reggio Emilia - ITALY | www.fluid-app.it | sales@fluid-app.it

VBDT CHECK VALVES BSPP

DIN2353 DOUBLE ACTING PILOT CHECK VALVES

VBDT pilot check valves are used to lock a double acting actuator in position, ensuring that the load is locked. This version was made for valve mounting with steel pipe.

HYDRAULIC CIRCUIT

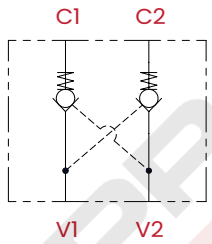

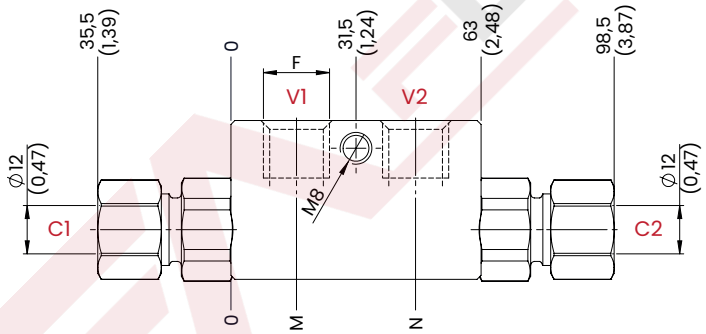

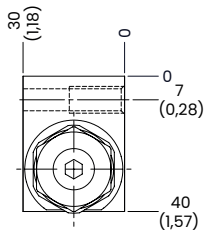

mm [Inches]

TECHNICAL CHARACTERISTICS

mm [Inches]

F	M	N
1/4 BSPP	13,5 [0,53]	49,5 [1,95]
3/8 BSPP	14,5 [0,57]	48,5 [1,90]
1/2 BSPP	23 [0,90]	59 [2,32]
Steel body		

PERFORMANCES

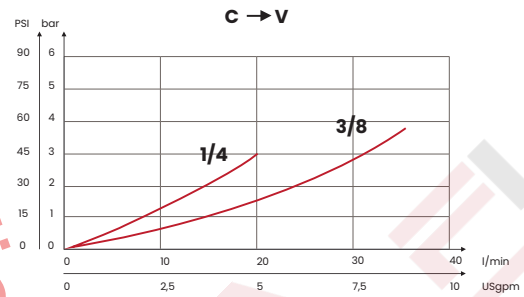

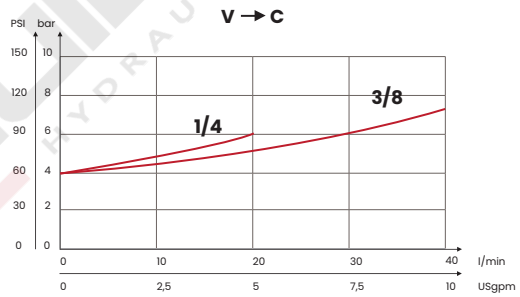

ORDERING CODE

CODE	TYPE	F ports	MAX FLOW l/min [USgpm]	MAX PRESSURE bar [PSI]	PILOT RATIO	CRACKING PRESSURE bar [PSI]	WEIGHT kg [lb]
FA5007	VBD1BT	1/4 BSPP	20 [5,3]	350 [5075]	1:5,5	4,5 [65]	0,67 [1,47]
FA5008	VBD2BT	3/8 BSPP	35 [9,2]				
Steel body							

UPDATE. Sept. 2024 (v.06)

Mineral oil: DIN 51524 ISO 6743/4 | Oil viscosity: 15 to 250 cSt 15-250 mm2/s | Oil temperature: -4°F + 176°F -20°C +80°C | Ambient temperature: -4°F + 122°F -20°C +50°C | Max contamination index with filter: 5 to 250 cSt 15-250 mm2/s | It is necessary a filter use to protect the valve (advised filtration 15 µm) | Max leakage: 0,25 cm3/min - 5 drops/min

Via Guadiana n° 8/1, 42124 Reggio Emilia - ITALY | www.fluid-app.it | sales@fluid-app.it

VBDG CHECK VALVES BSPP

DIN2353 DOUBLE ACTING PILOT CHECK VALVES, WITH ADJUSTABLE BANJO

VBDG are used to keep a double acting cylinder in its position, granting the load stop. This version has been manufactured for mounting of the valve with the pipe and adjustable banjo.

HYDRAULIC CIRCUIT

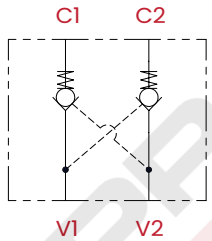

PERFORMANCES

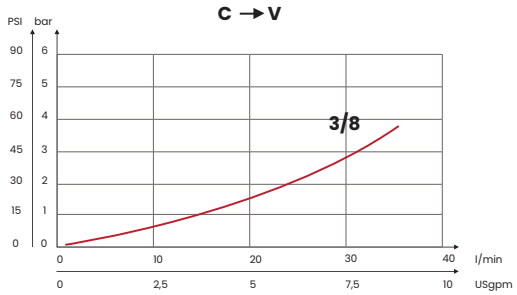

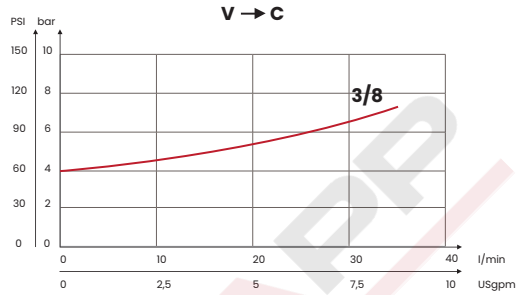

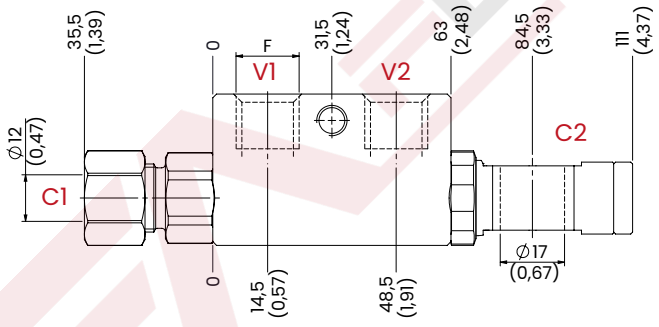

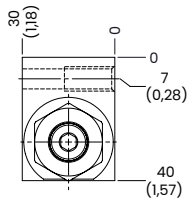

mm [Inches]

ORDERING CODE

CODE	TYPE	F ports	MAX FLOW l/min [USgpm]	MAX PRESSURE bar [PSI]	PILOT RATIO	CRACKING PRESSURE bar [PSI]	WEIGHT kg [lb]
FA5055	VBD2BG	3/8 BSPP	35 [9,2]	350 [5075]	1:5,5	4,5 [65]	0,67 [1,47]
Steel body							

UPDATE. Sept. 2024 (v.03)

Mineral oil: DIN 51524 ISO 6743/4 | Oil viscosity: 15 to 250 cSt 15-250 mm2/s | Oil temperature: -4°F + 176°F -20°C +80°C | Ambient temperature: -4°F + 122°F -20°C +50°C | Max contamination index with filter: 5 to 250 cSt 15-250 mm2/s | It is necessary a filter use to protect the valve (advised filtration 15 µm) | Max leakage: 0,25 cm3/min - 5 drops/min

Via Guadiana n° 8/1, 42124 Reggio Emilia - ITALY | www.fluid-app.it | sales@fluid-app.it

VBST CHECK VALVES BSPP

DIN2353 SINGLE ACTING PILOT CHECK VALVES

VBST pilot check valves are used to lock a single acting actuator in position, ensuring that the load is locked. This version was made for valve mounting with steel pipe.

HYDRAULIC CIRCUIT

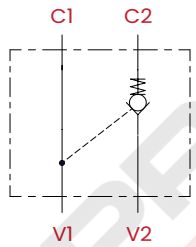

TECHNICAL CHARACTERISTICS

mm [Inches]

F	M	N
1/4 BSPP	13,5 [0,53]	49,5 [1,95]
3/8 BSPP	14,5 [0,57]	48,5 [1,90]
1/2 BSPP	23 [0,90]	59 [2,32]
Steel body		

PERFORMANCES

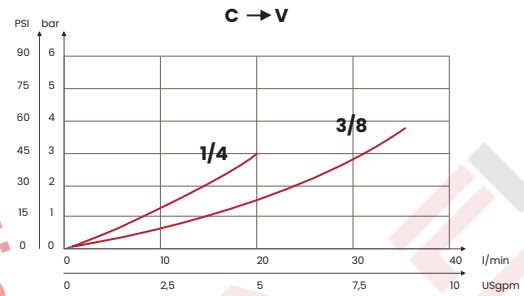

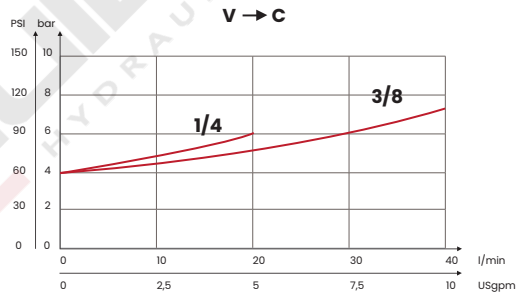

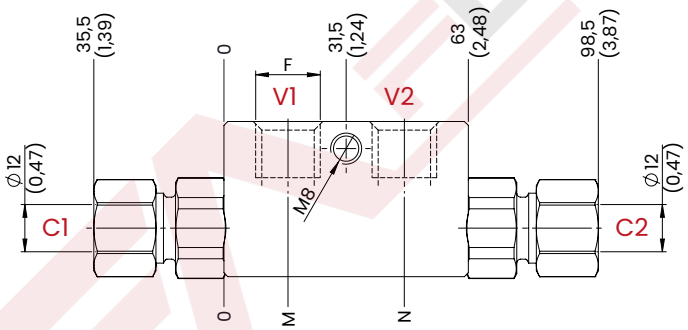

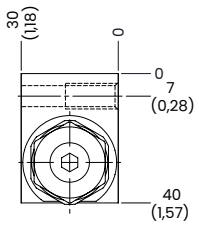

mm [Inches]

ORDERING CODE

CODE	TYPE	F ports	MAX FLOW l/min [USgpm]	MAX PRESSURE bar [PSI]	PILOT RATIO	CRACKING PRESSURE bar [PSI]	WEIGHT kg [lb]
FA5009	VBS1BT	1/4 BSPP	20 [5,3]	350 [5075]	1:5,5	4,5 [65]	0,62 [1,37]
FA5010	VBS2BT	3/8 BSPP	35 [9,2]				0,59 [1,3]
Steel body							

UPDATE. Sept. 2024 (v.06)

Mineral oil: DIN 51524 ISO 6743/4 | Oil viscosity: 15 to 250 cSt 15-250 mm2/s | Oil temperature: -4°F + 176°F -20°C +80°C | Ambient temperature: -4°F + 122°F -20°C +50°C | Max contamination index with filter: 5 to 250 cSt 15-250 mm2/s | It is necessary a filter use to protect the valve (advised filtration 15 µm) | Max leakage: 0,25 cm3/min - 5 drops/min

Via Guadiana n° 8/1, 42124 Reggio Emilia - ITALY | www.fluid-app.it | sales@fluid-app.it

VPD CHECK VALVES BSPP

DOUBLE ACTING PILOT CHECK VALVES

VPD pilot check valves are used to lock a double acting actuator in place in both directions, ensuring the load is locked.

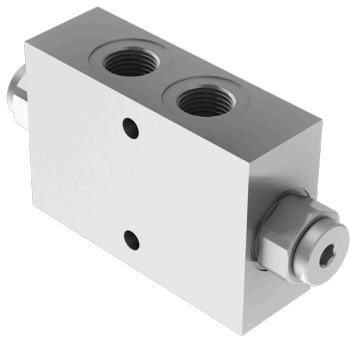

HYDRAULIC CIRCUIT

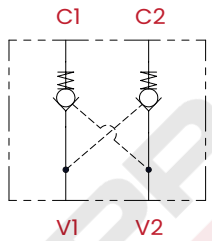

TECHNICAL CHARACTERISTICS

mm [Inches]

F	A	B	C	E	L	M	N	P	ØD	Q	R	S	T
1/4 BSPP	10 [0,39]	50 [1,97]	30 [1,18]	60 [2,36]	90 [3,54]	14 [0,55]	30 [1,18]	60 [2,36]	6,5 [0,25]	76 [3]	17 [0,67]	45 [1,77]	107 [4,21]
3/8 BSPP													
1/2 BSPP					110 [4,33]	20 [0,78]	37 [1,45]	73 [2,87]	8,5 [0,33]	90 [3,54]	22 [0,86]	55 [2,16]	132 [5,19]
Steel body (on request aluminium body)													

PERFORMANCES

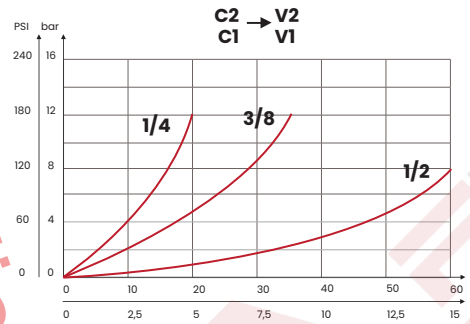

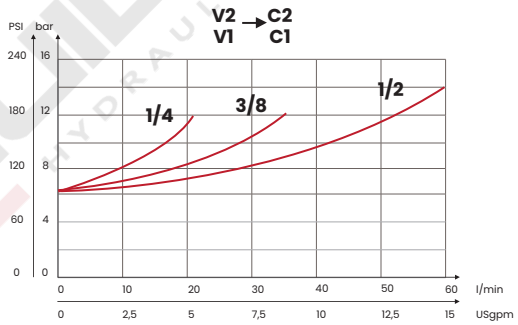

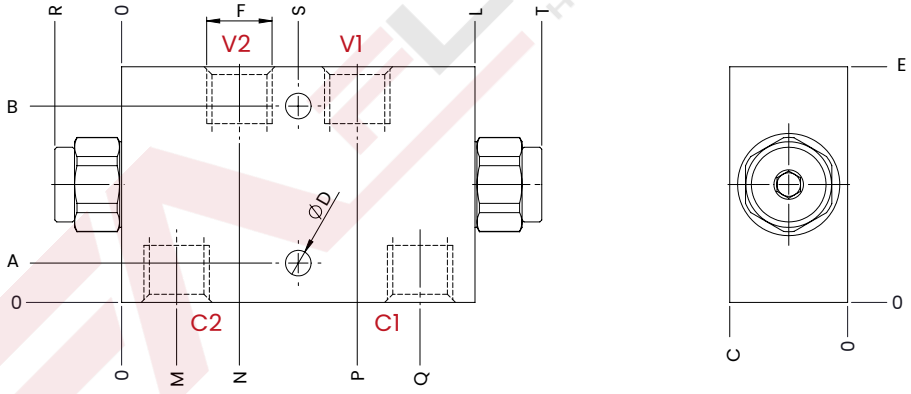

mm [Inches]

ORDERING CODE

CODE	TYPE	F ports	MAX FLOW l/min [USgpm]	MAX PRESSURE bar [PSI]	PILOT RATIO	CRACKING PRESSURE bar [PSI]	WEIGHT kg [lb]
FA5039	VPD1B	1/4 BSPP	20 [5,3]	350 [5075]	1:3,3	4,5 [65]	1,23 [2,70]
FA5011	VPD2B	3/8 BSPP	35 [9,2]				1,2 [2,64]
FA5013	VPD3B	1/2 BSPP	60 [15,83]		1:4		1,45 [3,20]

UPDATE. Feb. 2024 (v.09)

Mineral oil: DIN 51524 ISO 6743/4 | Oil viscosity: 15 to 250 cSt 15-250 mm2/s | Oil temperature: -4°F + 176°F -20°C +80°C | Ambient temperature: -4°F + 122°F -20°C +50°C | Max contamination index with filter: 5 to 250 cSt 15-250 mm2/s | It is necessary a filter use to protect the valve (advised filtration 15 µm) | Max leakage: 0,25 cm3/min - 5 drops/min

Via Guadiana n° 8/1, 42124 Reggio Emilia - ITALY | www.fluid-app.it | sales@fluid-app.it

VPF CHECK VALVES BSPP

DOUBLE ACTING PILOT CHECK VALVES - FLANGED VERSION

VPF pilot check valves are used to lock a double acting actuator in place in both directions, ensuring the load is locked.

HYDRAULIC CIRCUIT

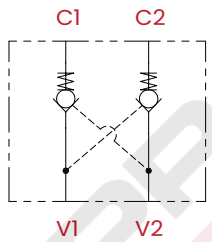

TECHNICAL CHARACTERISTICS

mm [Inches]

F	C	ØD	E	G	H	I	L	M	N	P	Q	R	S	T	U
3/8 BSPP	10 [0,39]	6,5 [0,25]	45 [1,77]	107 [4,21]	80 [3,15]	17 [0,67]	90 [3,54]	14 [0,55]	30 [1,18]	60 [2,36]	76 [2,99]	10 [0,39]	50 [1,97]	29,5 [1,16]	60 [2,36]
1/2 BSPP	15 [0,59]	8,5 [0,33]	55 [2,16]	132 [5,19]	95 [3,74]	22 [0,86]	110 [4,33]	22,5 [0,89]	37 [1,45]	73 [2,87]	87,5 [3,44]				
Steel body (on request aluminium body)															

PERFORMANCES

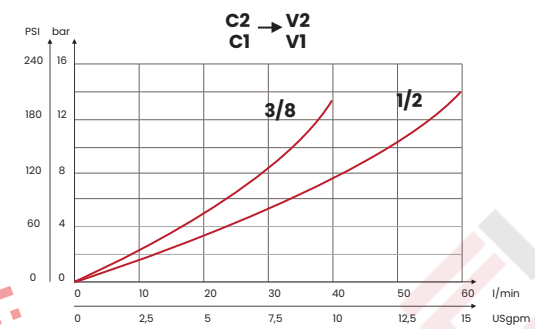

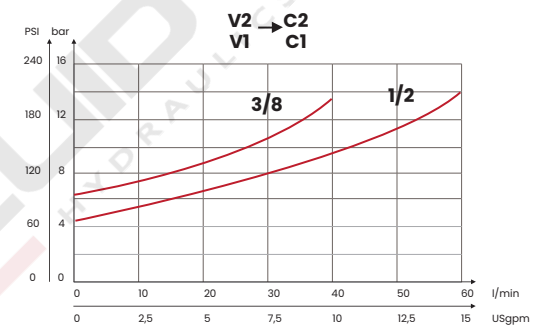

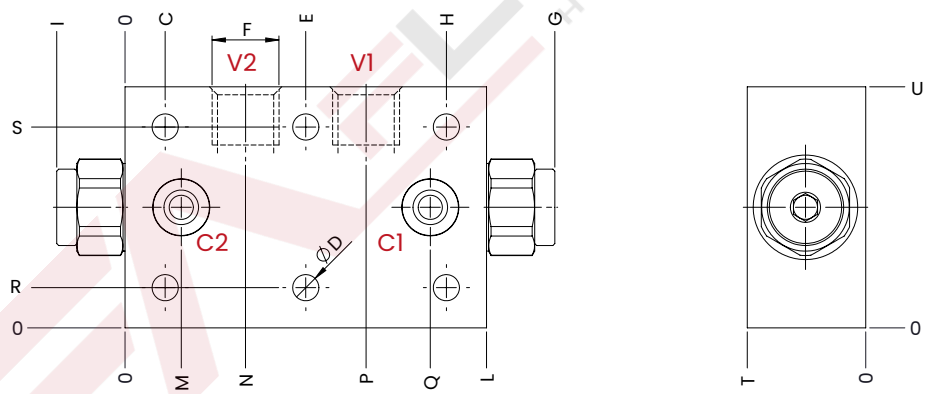

mm [Inches]

ORDERING CODE

CODE	TYPE	F ports	MAX FLOW l/min [USgpm]	MAX PRESSURE bar [PSI]	PILOT RATIO	CRACKING PRESSURE bar [PSI]	WEIGHT kg [lb]
FA5012	VPF2B	3/8 BSPP	35 [9,2]	350 [5075]	1:3,3	4,5 [65]	1,2 [2,64]
FA5014	VPF3B	1/2 BSPP	60 [15,83]		1:4		1,45 [3,20]

UPDATE. Sept. 2024 (v.05)

Mineral oil: DIN 51524 ISO 6743/4 | Oil viscosity: 15 to 250 cSt 15-250 mm2/s | Oil temperature: -4°F + 176°F -20°C +80°C | Ambient temperature: -4°F + 122°F -20°C +50°C | Max contamination index with filter: 5 to 250 cSt 15-250 mm2/s | It is necessary a filter use to protect the valve (advised filtration 15 µm) | Max leakage: 0,25 cm3/min - 5 drops/min

Via Guadiana n° 8/1, 42124 Reggio Emilia - ITALY | www.fluid-app.it | sales@fluid-app.it

VSP MANUAL CHECK VALVES BSPP - RIGHT

SINGLE ACTING PILOT CHECK VALVES WITH MANUAL SHUT-OFF

VSP pilot check valves are mainly used to lock a single acting cylinder in position, they are made in left and right hand versions.

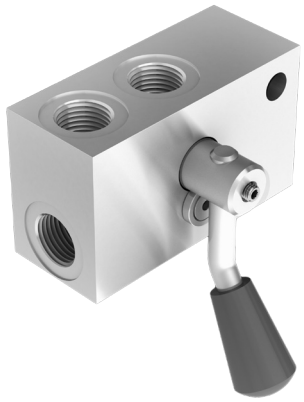

HYDRAULIC CIRCUIT

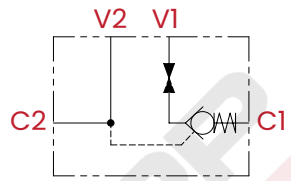

PERFORMANCES

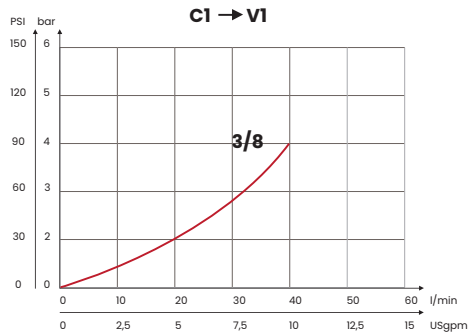

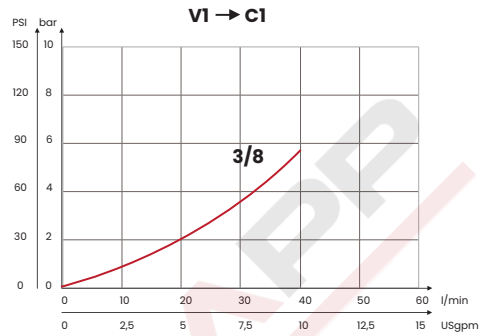

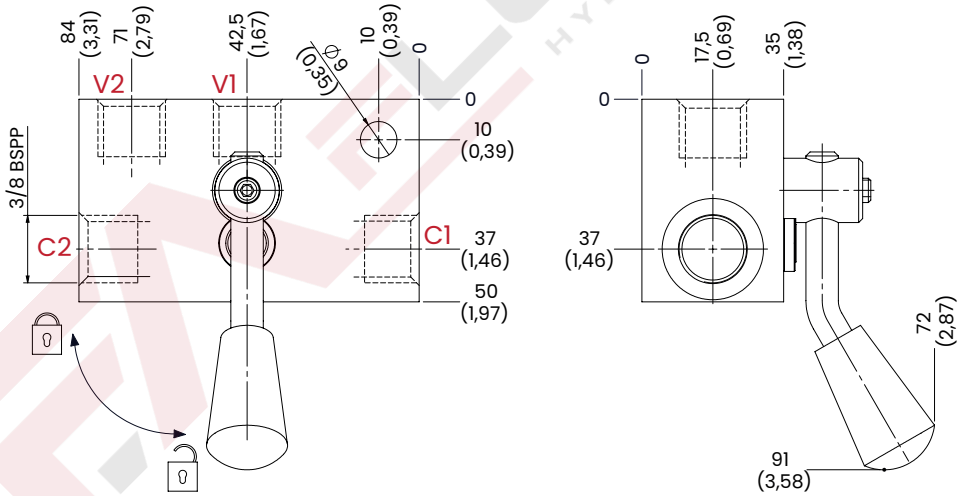

mm [Inches]

ORDERING CODE

CODE	TYPE	F ports	MAX FLOW l/min [USgpm]	MAX PRESSURE bar [PSI]	PILOT RATIO	CRACKING PRESSURE bar [PSI]	WEIGHT kg [lb]
FA5015	VSP2BDX	3/8 BSPP	40 [10,52]	350 [5075]	1:4,20	4,5 [65]	1,08 [2,38]
Steel body (on request aluminium body)							

UPDATE. Jan. 2024 (v.04)

Mineral oil: DIN 51524 ISO 6743/4 | Oil viscosity: 15 to 250 cSt 15-250 mm2/s | Oil temperature: -4°F + 176°F -20°C +80°C | Ambient temperature: -4°F + 122°F -20°C +50°C | Max contamination index with filter: 5 to 250 cSt 15-250 mm2/s | It is necessary a filter use to protect the valve (advised filtration 15 µm) | Max leakage: 0,25 cm3/min - 5 drops/min

Via Guadiana n° 8/1, 42124 Reggio Emilia - ITALY | www.fluid-app.it | sales@fluid-app.it

VSP MANUAL CHECK VALVES BSPP - LEFT

SINGLE ACTING PILOT CHECK VALVES WITH MANUAL SHUT-OFF

VSP pilot check valves are mainly used to lock a single acting cylinder in position, they are made in left and right hand versions.

HYDRAULIC CIRCUIT

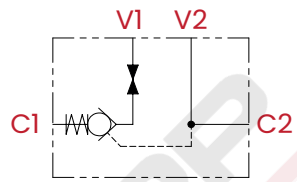

PERFORMANCES

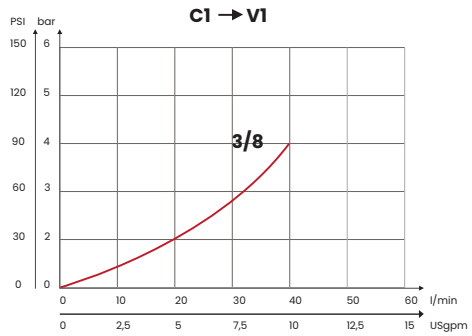

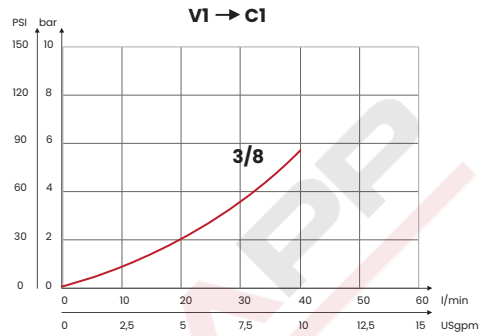

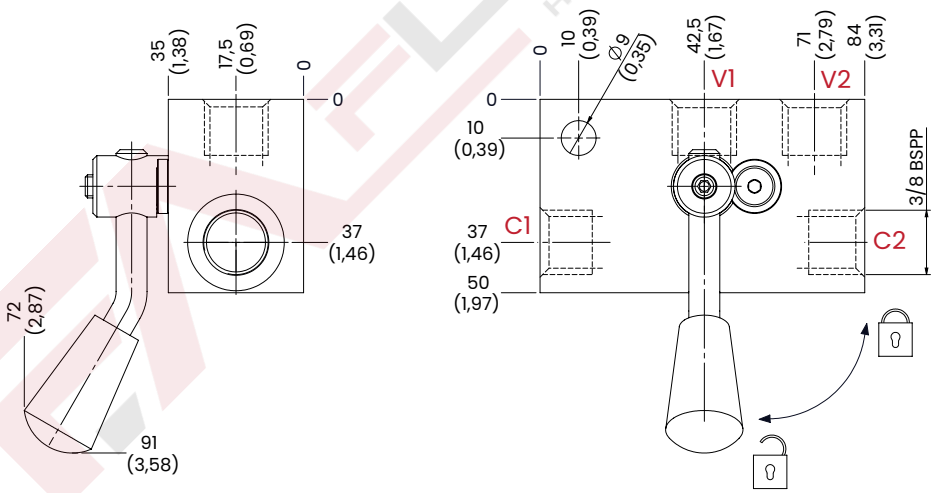

mm [Inches]

ORDERING CODE

CODE	TYPE	F ports	MAX FLOW l/min [USgpm]	MAX PRESSURE bar [PSI]	PILOT RATIO	CRACKING PRESSURE bar [PSI]	WEIGHT kg [lb]
FA5016	VSP2BSX	3/8 BSPP	40 [10,52]	350 [5075]	1:4,20	4,5 [65]	1,08 [2,38]
Steel body (on request aluminium body)							

UPDATE. Jan. 2024 (v.04)

Mineral oil: DIN 51524 ISO 6743/4 | Oil viscosity: 15 to 250 cSt 15-250 mm2/s | Oil temperature: -4°F + 176°F -20°C +80°C | Ambient temperature: -4°F + 122°F -20°C +50°C | Max contamination index with filter: 5 to 250 cSt 15-250 mm2/s | It is necessary a filter use to protect the valve (advised filtration 15 µm) | Max leakage: 0,25 cm3/min - 5 drops/min

Via Guadiana n° 8/1, 42124 Reggio Emilia - ITALY | www.fluid-app.it | sales@fluid-app.it

VSS SHUTTLE VALVES BSPP

SHUTTLE VALVES

VSS shuttle valves are used when two pressure lines converge in the valve at the same time (the lower pressure line locks).

HYDRAULIC CIRCUIT

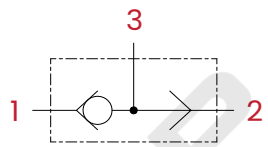

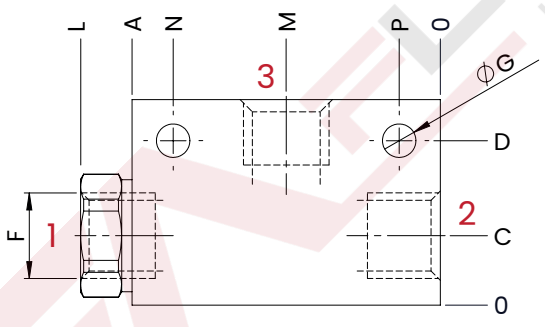

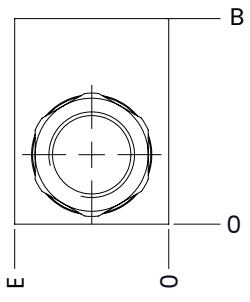

mm [Inches]

TECHNICAL CHARACTERISTICS

mm [Inches]

F	L	A	C	D	P	M	N	E	B	G
1/4 BSPP	57 [2,24]	52 [2,04]	12 [0,47]	27 [1,06]	9 [0,35]	27,5 [1,08]	43 [1,69]	25 [0,98]	35 [1,37]	6,5 [0,25]
3/8 BSPP	70 [2,76]	60 [2,36]	13,5 [0,53]	32 [1,26]	8 [0,31]	30 [1,18]	52 [2,05]	30 [1,18]	40 [1,57]	8,5 [0,33]
Steel body										

PERFORMANCES

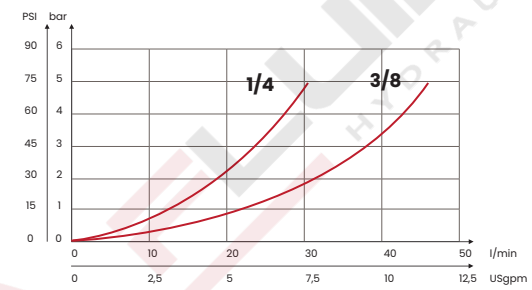

ORDERING CODE

CODE	TYPE	F ports	MAX FLOW l/min [USgpm]	MAX PRESSURE bar [PSI]	WEIGHT kg [lb]
FA6010	VSS1B	1/4 BSPP	30 [7,9]	350 [5075]	0,29 [0,65]
FA6011	VSS2B	3/8 BSPP	45 [12]		0,37 [0,81]

UPDATE. Oct. 2023 (v.06)

Mineral oil: DIN 51524 ISO 6743/4 | Oil viscosity: 15 to 250 cSt 15-250 mm2/s | Oil temperature: -4°F + 176°F -20°C +80°C | Ambient temperature: -4°F + 122°F -20°C +50°C | Max contamination index with filter: 5 to 250 cSt 15-250 mm2/s | It is necessary a filter use to protect the valve (advised filtration 15 µm)

Via Guadiana n° 8/1, 42124 Reggio Emilia - ITALY | www.fluid-app.it | sales@fluid-app.it

VSD SEQUENCE BSPP

SEQUENCE VALVES

VSD sequence valves are used with two cylinders; the end of the work of the first one coincides with the beginning of the second one, at a given setting pressure.

HYDRAULIC CIRCUIT

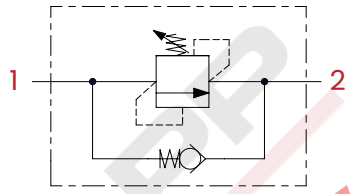

PERFORMANCES

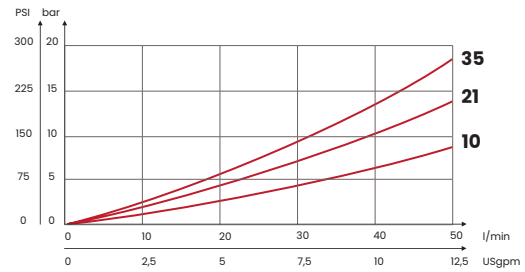

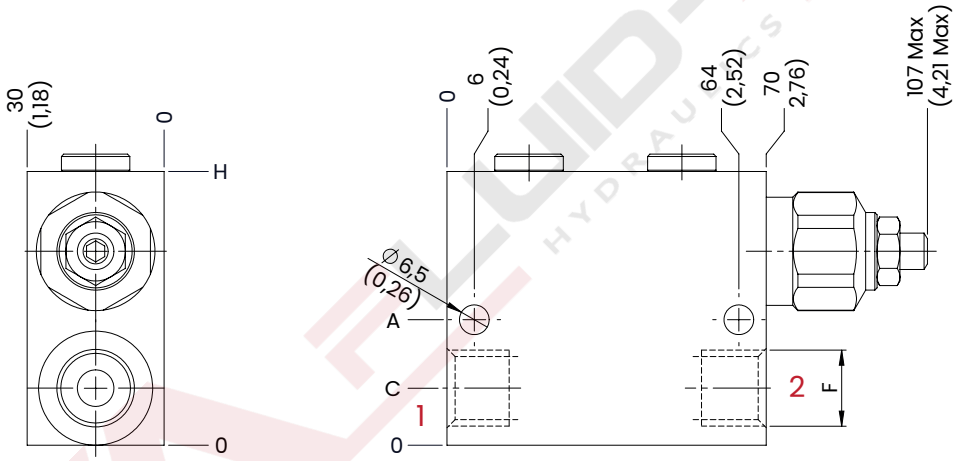

TAMPER PROOF CAP M8

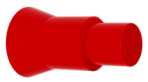

CODE
62200020

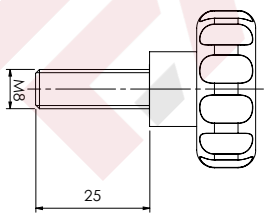

HANDKNOB CODE

62200012

TECHNICAL CHARACTERISTICS

mm [Inches]

F	H	C	A
3/8 BSPP	60 [2,36]	13 [0,51]	33 [1,3]
1/2 BSPP	70 [2,76]	17 [0,67]	35 [1,38]
Steel body			

ORDERING CODE

CODE	TYPE	F ports	MAX FLOW l/min [USgpm]	MAX PRESSURE bar [PSI]	RANGE SPRING bar [PSI]	INCREASE TO TURN bar [PSI]	WEIGHT kg [lb]
FA6012	VSD2BC10	3/8 BSPP	40 [10,6]	350 [5075]	10/70 [145/1015]	16,5 [239]	0,9 [1,98]
FA6013	VSD2BC21				20/210 [290/3045]	33 [479]	
FA6014	VSD2BC35				70/350 [1015/5075]	70 [1015]	
FA6015	VSD3BC10	1/2 BSPP	50 [13,2]		10/70 [145/1015]	16,5 [239]	1 [2,21]
FA6016	VSD3BC21				20/210 [290/3045]	33 [479]	
FA6017	VSD3BC35				70/350 [1015/5075]	70 [1015]	

UPDATE. Jan. 2024 (v.06)

Mineral oil: DIN 51524 ISO 6743/4 | Oil viscosity: 15 to 250 cSt 15-250 mm2/s | Oil temperature: -4°F + 176°F -20°C +80°C | Ambient temperature: -4°F + 122°F -20°C +50°C | Max contamination index with filter: 5 to 250 cSt 15-250 mm2/s | It is necessary a filter use to protect the valve (advised filtration 15 µm) | Max leakage: 0,25 cm3/min - 5 drops/min at 80% of the calibration pressure

Via Guadiana n° 8/1, 42124 Reggio Emilia - ITALY | www.fluid-app.it | sales@fluid-app.it

VAA DOUBLE CROSS BSPP

DOUBLE CROSS RELIEF VALVES 50 L

VAA valves with steel manifold and two pressure relief valves, they control the pressure on both connection lines.

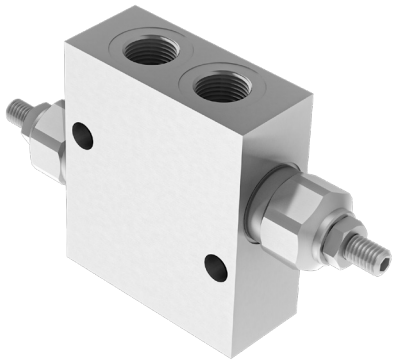

HYDRAULIC CIRCUIT

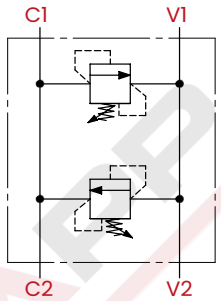

PERFORMANCES

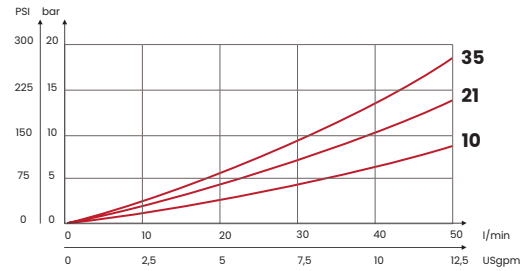

TAMPER PROOF CAP M8

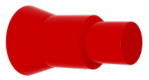

CODE
62200020

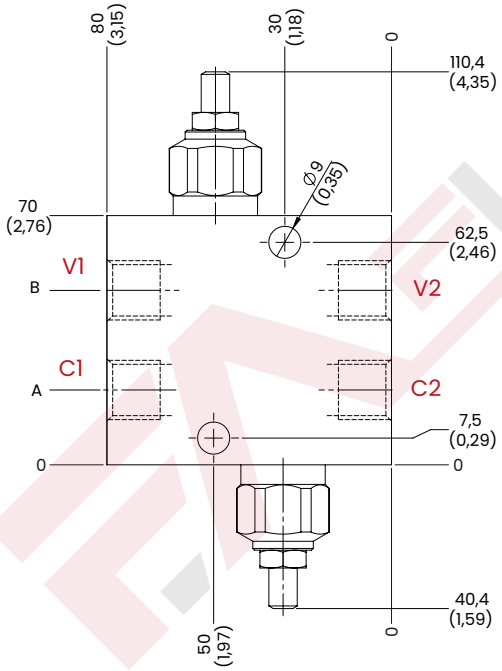

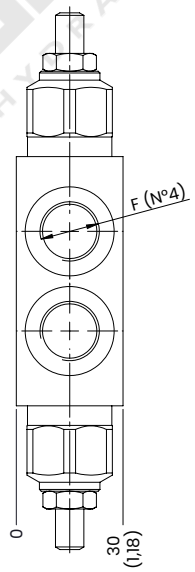

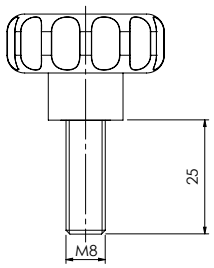

HANDKNOB CODE

62200012

mm [Inches]

ORDERING CODE

CODE	TYPE	F ports	MAX FLOW l/min [USgpm]	MAX PRESSURE bar [PSI]	RANGE SPRING bar [PSI]	INCREASE TO TURN bar [PSI]	A	B	WEIGHT kg [lb]
FA6039	VAA2BC10	3/8 BSPP	40 [10,6]	350 [5075]	10/70 [145/1015]	12 [174]	21 [0,82]	49 [1,93]	1,22 [2,68]
FA6040	VAA2BC21				20/210 [290/3045]	33 [479]			
FA6041	VAA2BC35				70/350 [1015/5075]	70 [1015]			
FA6042	VAA3BC10	1/2 BSPP	50 [13,2]		10/70 [145/1015]	12 [174]	18,5 [0,73]	51,5 [2,03]	1,16 [2,55]
FA6043	VAA3BC21				20/210 [290/3045]	33 [479]			
FA6044	VAA3BC35				70/350 [1015/5075]	70 [1015]			
Steel body									

UPDATE. Jan. 2024 (v.05)

Mineral oil: DIN 51524 ISO 6743/4 | Oil viscosity: 15 to 250 cSt 15-250 mm2/s | Oil temperature: -4°F + 176°F -20°C +80°C | Ambient temperature: -4°F + 122°F -20°C +50°C | Max contamination index with filter: 5 to 250 cSt 15-250 mm2/s | It is necessary a filter use to protect the valve (advised filtration 15 µm) | Max leakage: 0,25 cm3/min - 5 drops/min at 80% of the calibration pressure

Via Guadiana n° 8/1, 42124 Reggio Emilia - ITALY | www.fluid-app.it | sales@fluid-app.it

M20B *RELIEF VALVES - 30 l/min BSPP*

RELIEF VALVES 30 l/min

The purpose of the M20B pressure relief valve is to protect the hydraulic system from malfunctions or failures caused by excessively high pressures in the circuit.

HYDRAULIC CIRCUIT

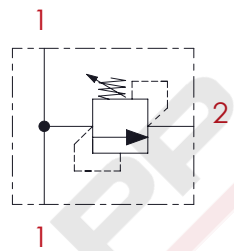

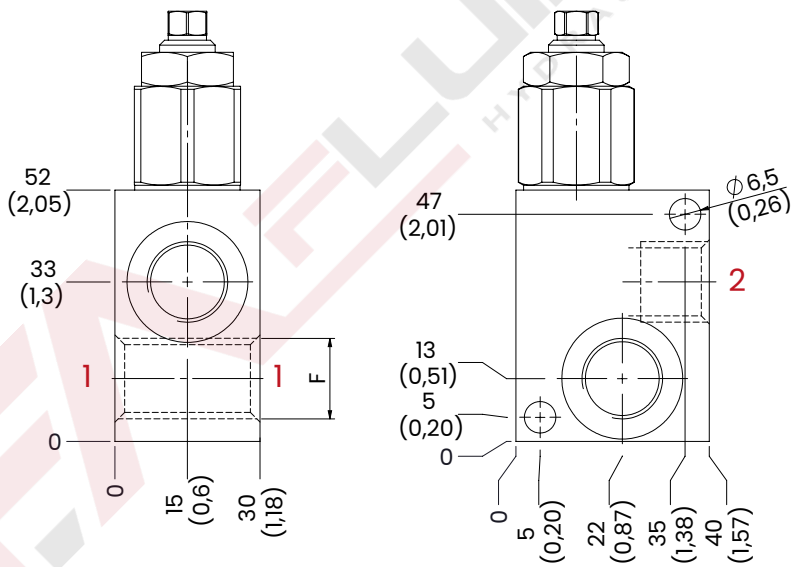

mm [Inches]

PERFORMANCES

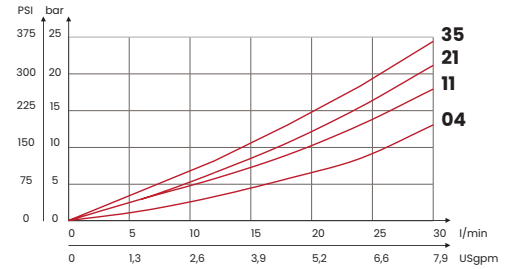

TAMPER PROOF CAP

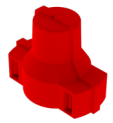

CODE
KIT137

ORDERING CODE

CODE	TYPE	F ports	MAX FLOW l/min [USgpm]	MAX PRESSURE bar [PSI]	RANGE SPRING bar [PSI]	INCREASE TO TURN bar [PSI]	WEIGHT kg [lb]
FA6018	M201BC04	1/4 BSPP	20 [5,3]	350 [5075]	10/40 [145/580]	20 [290]	0,47 [1,03]
FA6019	M201BC11				20/110 [290/1595]	40 [580]	
FA6020	M201BC21				30/210 [435/3045	70 [1015]	
FA6021	M201BC35				40/350 [580/5075]	130 [1885]	
FA6022	M202BC04	3/8 BSPP	30 [8]		10/40 [145/580]	20 [290]	
FA6023	M202BC11				20/110 [290/1595]	40 [580]	
FA6024	M202BC21				30/210 [435/3045	70 [1015]	
FA6025	M202BC35				40/350 [580/5075]	130 [1885]	
Steel body							

UPDATE. Jan. 2024 (v.05)

Mineral oil: DIN 51524 ISO 6743/4 | Oil viscosity: 15 to 250 cSt 15-250 mm2/s | Oil temperature: -4°F + 176°F -20°C +80°C | Ambient temperature: -4°F + 122°F -20°C +50°C | Max contamination index with filter: 5 to 250 cSt 15-250 mm2/s | It is necessary a filter use to protect the valve (advised filtration 15 µm) | Max leakage: 0,25 cm3/min - 5 drops/min at 80% of the calibration pressure

Via Guadiana n° 8/1, 42124 Reggio Emilia - ITALY | www.fluid-app.it | sales@fluid-app.it

M40B *RELIEF VALVES - 50 l/min BSPP*

RELIEF VALVES 50 l/min

The purpose of the M40B pressure relief valve is to protect the hydraulic system from malfunctions or failures caused by excessively high pressures in the circuit.

HYDRAULIC CIRCUIT

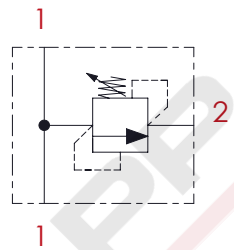

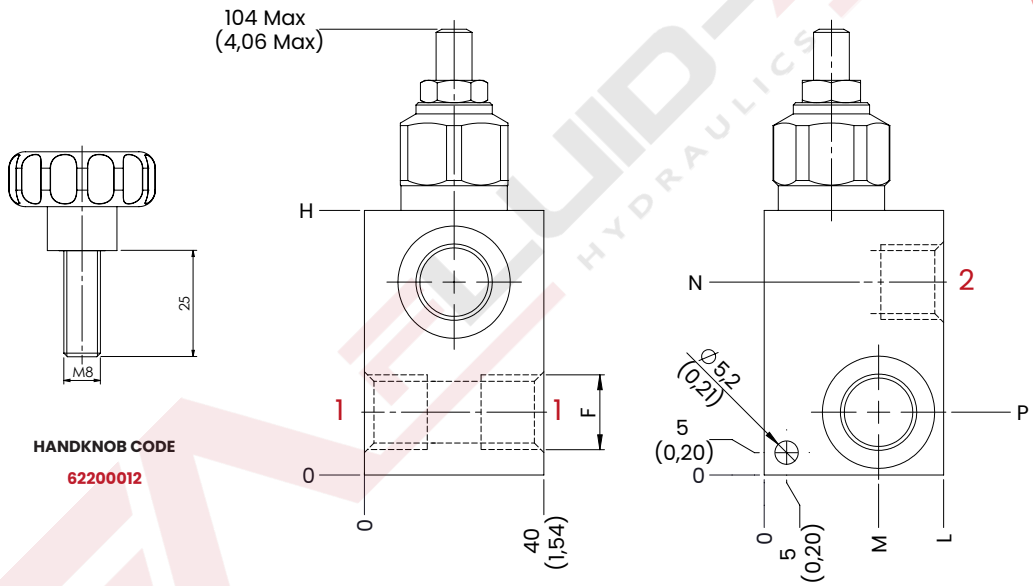

HANDKNOB CODE

62200012

PERFORMANCES

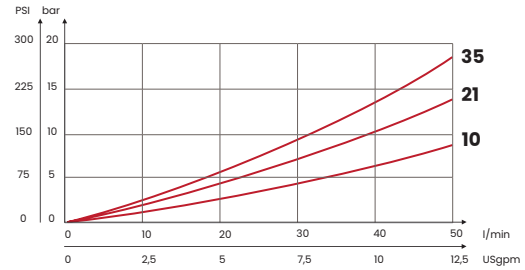

TAMPER PROOF CAP M8

CODE
62200020

TECHNICAL CHARACTERISTICS

mm [Inches]

F	L	M	N	P	H
3/8 BSPP	40 [1,57]	27 [1,06]	43 [1,69]	14 [0,55]	59 [2,32]
1/2 BSPP	45 [1,77]	29,5 [1,16]	44 [1,73]	15 [0,59]	60 [2,36]
Steel body					

ORDERING CODE

CODE	TYPE	F ports	MAX FLOW l/min [USgpm]	MAX PRESSURE bar [PSI]	RANGE SPRING bar [PSI]	INCREASE TO TURN bar [PSI]	WEIGHT kg [lb]
FA6026	M402BC10	3/8 BSPP	40 [10,6]	350 [5075]	10/70 [145/1015]	16,5 [239]	0,6 [1,32]
FA6027	M402BC21				20/210 [290/3045]	33 [479]	
FA6028	M402BC35				70/350 [1015/5075]	70 [1015]	
FA6029	M403BC10	1/2 BSPP	50 [13,2]		10/70 [145/1015]	16,5 [239]	0,7 [1,54]
FA6030	M403BC21				20/210 [290/3045]	33 [479]	
FA6031	M403BC35				70/350 [1015/5075]	70 [1015]	

UPDATE. Jan. 2024 (v.06)

Mineral oil: DIN 51524 ISO 6743/4 | Oil viscosity: 15 to 250 cSt 15-250 mm2/s | Oil temperature: -4°F + 176°F -20°C +80°C | Ambient temperature: -4°F + 122°F -20°C +50°C | Max contamination index with filter: 5 to 250 cSt 15-250 mm2/s | It is necessary a filter use to protect the valve (advised filtration 15 µm) | Max leakage: 0,25 cm3/min - 5 drops/min at 80% of the calibration pressure

Via Guadiana n° 8/1, 42124 Reggio Emilia - ITALY | www.fluid-app.it | sales@fluid-app.it

M80B *RELIEF VALVES - 80 l/min BSPP*

RELIEF VALVES 80 l/min

The purpose of the M80 pressure relief valve is to protect the hydraulic system from malfunctions or failures caused by excessively high pressures in the circuit.

HYDRAULIC CIRCUIT

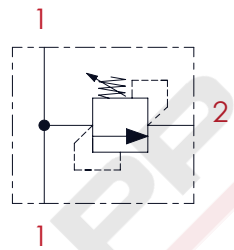

PERFORMANCES

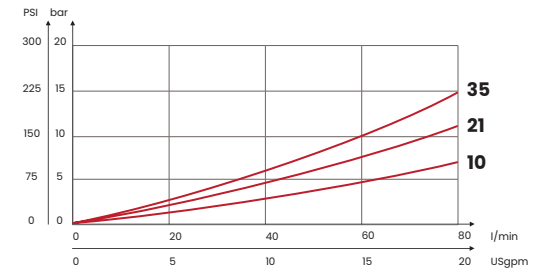

TAMPER PROOF CAP M10

CODE
62200021

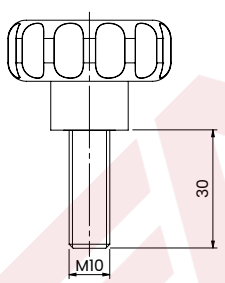

HANDKNOB CODE

62200010

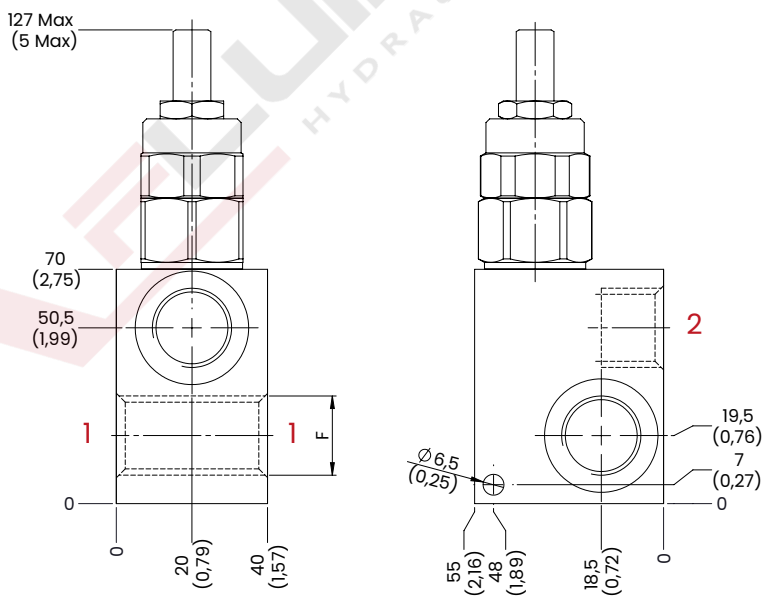

mm [Inches]

ORDERING CODE

CODE	TYPE	F ports	MAX FLOW l/min [USgpm]	MAX PRESSURE bar [PSI]	RANGE SPRING bar [PSI]	INCREASE TO TURN bar [PSI]	WEIGHT kg [lb]
FA6032	M804BC10	3/4 BSPP	80 [21,1]	350 [5075]	10/100 [145/1450]	16,5 [239]	1 [2,2]
FA6033	M804BC25				20/250 [290/3625]	33 [479]	
FA6034	M804BC35				50/350 [725/5075]	70 [1015]	
Steel body							

UPDATE. June 2023 (v.06)

Mineral oil: DIN 51524 ISO 6743/4 | Oil viscosity: 15 to 250 cSt 15-250 mm2/s | Oil temperature: -4°F + 176°F -20°C +80°C | Ambient temperature: -4°F + 122°F -20°C +50°C | Max contamination index with filter: 5 to 250 cSt 15-250 mm2/s | It is necessary a filter use to protect the valve (advised filtration 15 µm) | Max leakage: 0,25 cm3/min - 5 drops/min at 80% of the calibration pressure

Via Guadiana n° 8/1, 42124 Reggio Emilia - ITALY | www.fluid-app.it | sales@fluid-app.it

VDF *DIVIDER BSPP*

FLOW DIVIDERS

Flow dividers/unifiers allow the inlet flow to be divided into two equal parts, while in the opposite direction they unify it.

HYDRAULIC CIRCUIT

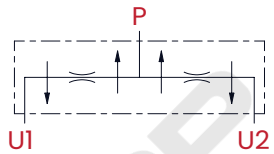

PERFORMANCES

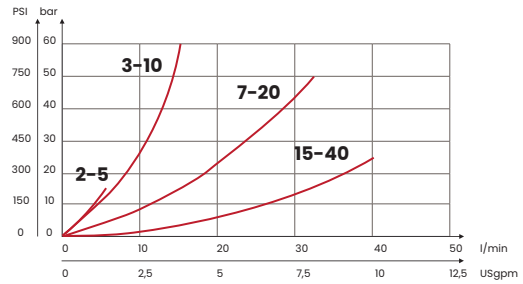

Specifications
Maximum division error: ±10% of the oil flow in U1 or U2 and 120 bar [1750 PSI] pressure difference between U1 and U2.
(Division rate 50%÷50%)

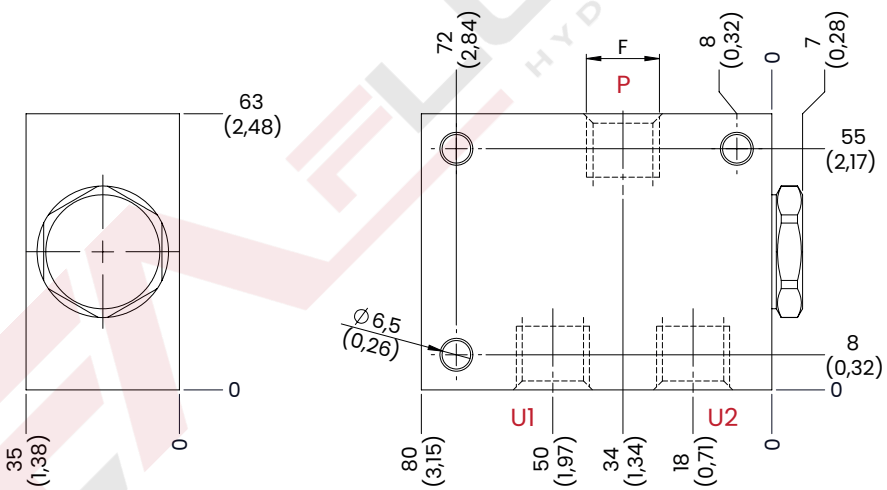

mm [Inches]

ORDERING CODE

CODE	TYPE	P ports	U1/U2 ports	INLET FLOW RANGE l/min [USgpm]	MAX FLOW l/min [USgpm]	MAX PRESSURE bar [PSI]	WEIGHT kg [lb]
FA4060	VDF2B2B1	3/8 BSPP	3/8 BSPP	2-5 [0,5-1,3]	40 [10,6]	210 [3050]	0,5 [1,1]
FA4061	VDF2B2B2			3-10 [0,8-2,6]			
FA4062	VDF2B2B3			7-20 [1,8-5,2]			
FA4063	VDF2B2B4			15-40 [3,9-10,4]			
FA4064	VDF3B2B4	1/2 BSPP					
FA4065	VDF3B3B3		1/2 BSPP	7-20 [1,8-5,2]			
FA4066	VDF3B3B4			15-40 [3,9-10,4]			
Aluminium body							

UPDATE. March 2023 (v.04)

Mineral oil: DIN 51524 ISO 6743/4 | Oil viscosity: 15 to 250 cSt 15-250 mm2/s | Oil temperature: -4°F + 176°F -20°C +80°C | Ambient temperature: -4°F + 122°F -20°C +50°C | Max contamination index with filter: 5 to 250 cSt 15-250 mm2/s | It is necessary a filter use to protect the valve (advised filtration 15 µm)

Via Guadiana n° 8/1, 42124 Reggio Emilia - ITALY | www.fluid-app.it | sales@fluid-app.it

MC3 *CETOP 3*

CETOP 3 SINGLE MANIFOLDS

The MC3 bases allow the assembly of a single CETOP 3 solenoid valve, they are supplied with a relief valve.

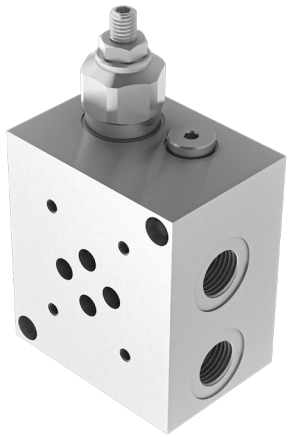

HYDRAULIC CIRCUIT

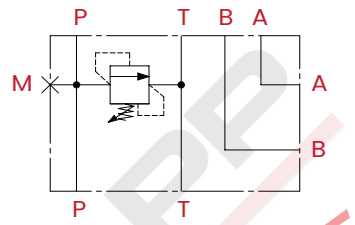

PERFORMANCES

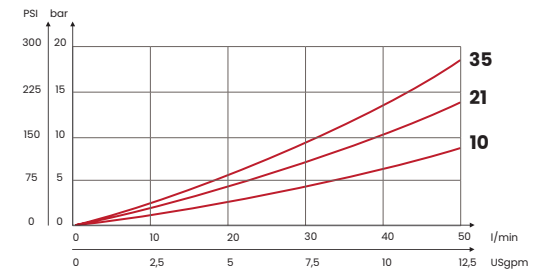

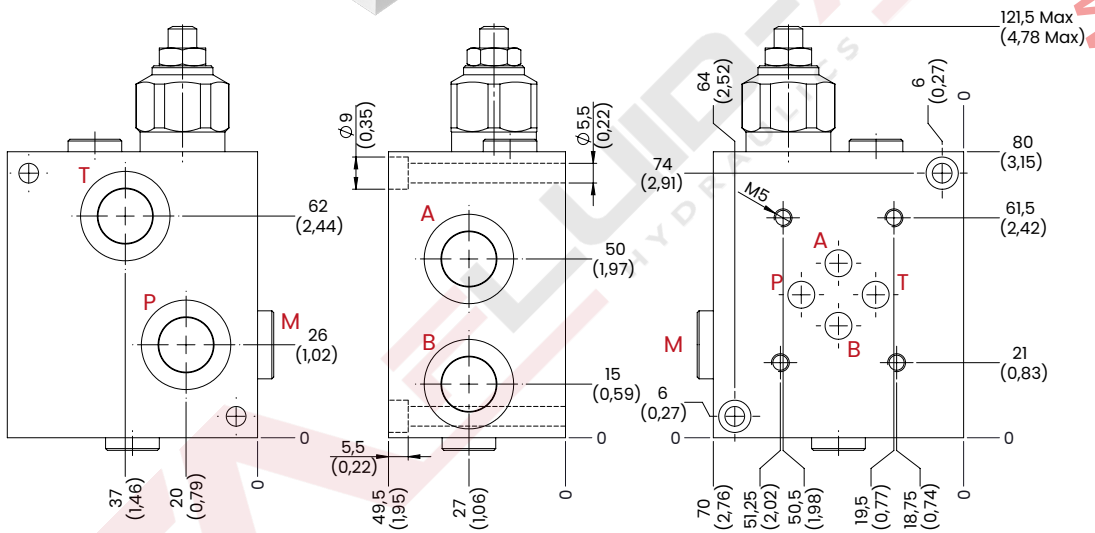

TAMPER PROOF CAP M8

CODE
62200020

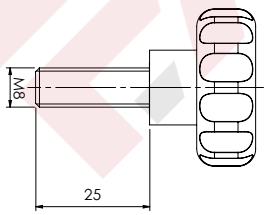

HANDKNOB CODE

62200012

TECHNICAL CHARACTERISTICS

mm [Inches]

A-B-P-T ports	M ports
3/8 BSPP	1/4 BSPP
Aluminium body	

ORDERING CODE

CODE	TYPE	MAX FLOW l/min [USgpm]	MAX PRESSURE bar [PSI]	RANGE SPRING bar [PSI]	INCREASE TO TURN bar [PSI]	WEIGHT kg [lb]
FA6035	MC3C10	50 [13,3]	210 [3045]	10/70 [145/1015]	16,5 [239]	0,8 [1,76]
FA6036	MC3C21			20/210 [290/3045]	33 [479]	
FA6159	MC3C35		350 [5075]	70/350 [1015/5075]	70 [1015]	

UPDATE. Aug. 2024 (v.08)

Mineral oil: DIN 51524 ISO 6743/4 | Oil viscosity: 15 to 250 cSt 15-250 mm2/s | Oil temperature: -4°F + 176°F -20°C +80°C | Ambient temperature: -4°F + 122°F -20°C +50°C | Max contamination index with filter: 5 to 250 cSt 15-250 mm2/s | It is necessary a filter use to protect the valve (advised filtration 15 µm) | Max leakage: 0,25 cm3/min - 5 drops/min at 80% of the calibration pressure

Via Guadiana n° 8/1, 42124 Reggio Emilia - ITALY | www.fluid-app.it | sales@fluid-app.it

MC5 *CETOP 5*

CETOP 5 SINGLE MANIFOLDS

The MC5 bases allow the assembly of a single CETOP 5 solenoid valve, they are supplied with a relief valve.

HYDRAULIC CIRCUIT

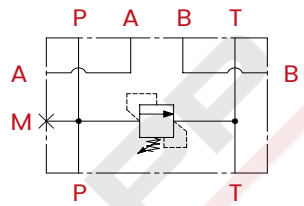

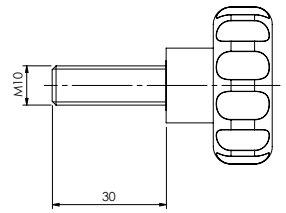

HANDKNOB CODE

62200010

TECHNICAL CHARACTERISTICS

mm [Inches]

A-B-P-T ports	M ports
1/2 BSPP	1/4 BSPP
Aluminium body	

PERFORMANCES

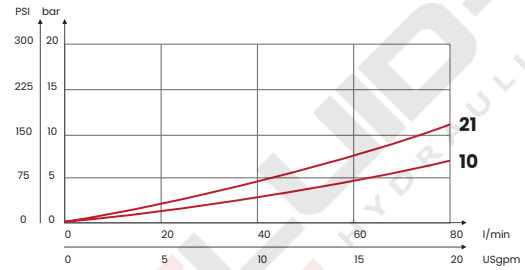

TAMPER PROOF CAP M10

CODE
62200021

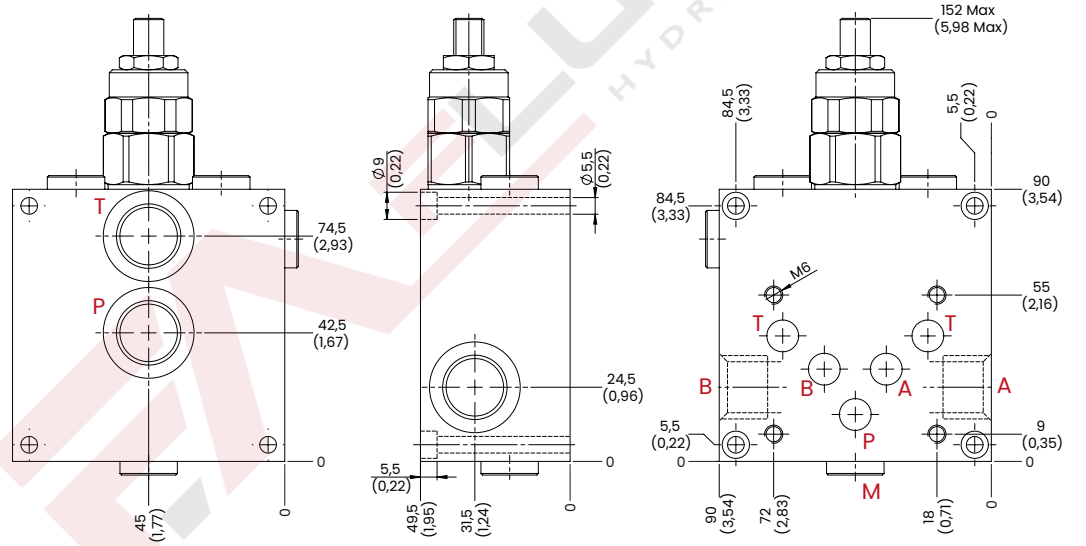

mm [Inches]

ORDERING CODE

CODE	TYPE	MAX FLOW l/min [USgpm]	MAX PRESSURE bar [PSI]	RANGE SPRING bar [PSI]	INCREASE TO TURN bar [PSI]	WEIGHT kg [lb]
FA6037	MC5C10	80 [21,1]	210 [3045]	10/100 [145/1450]	25 [362]	1,20 [2,64]
FA6038	MC5C21			20/210 [290/3045]	40 [580]	

UPDATE. Jan. 2024 (v.05)

Mineral oil: DIN 51524 ISO 6743/4 | Oil viscosity: 15 to 250 cSt 15-250 mm2/s | Oil temperature: -4°F + 176°F -20°C +80°C | Ambient temperature: -4°F + 122°F -20°C +50°C | Max contamination index with filter: 5 to 250 cSt 15-250 mm2/s | It is necessary a filter use to protect the valve (advised filtration 15 µm) | Max leakage: 0,25 cm3/min - 5 drops/min at 80% of the calibration pressure

Via Guadiana n° 8/1, 42124 Reggio Emilia - ITALY | www.fluid-app.it | sales@fluid-app.it

MM CETOP 3 - WITH RELIEF VALVE

CETOP 3 MULTISTATION MANIFOLDS

The MM aluminum manifolds allow the assembly of 2 or more CETOP 3 solenoid valves, they are supplied with a relief valve.

HYDRAULIC CIRCUIT

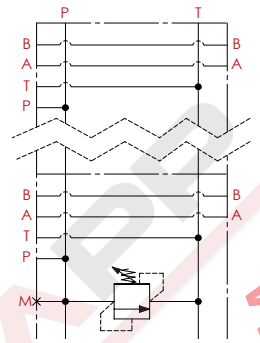

PERFORMANCES

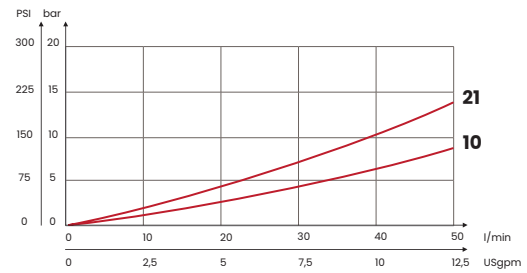

On request, up to 12 stations.

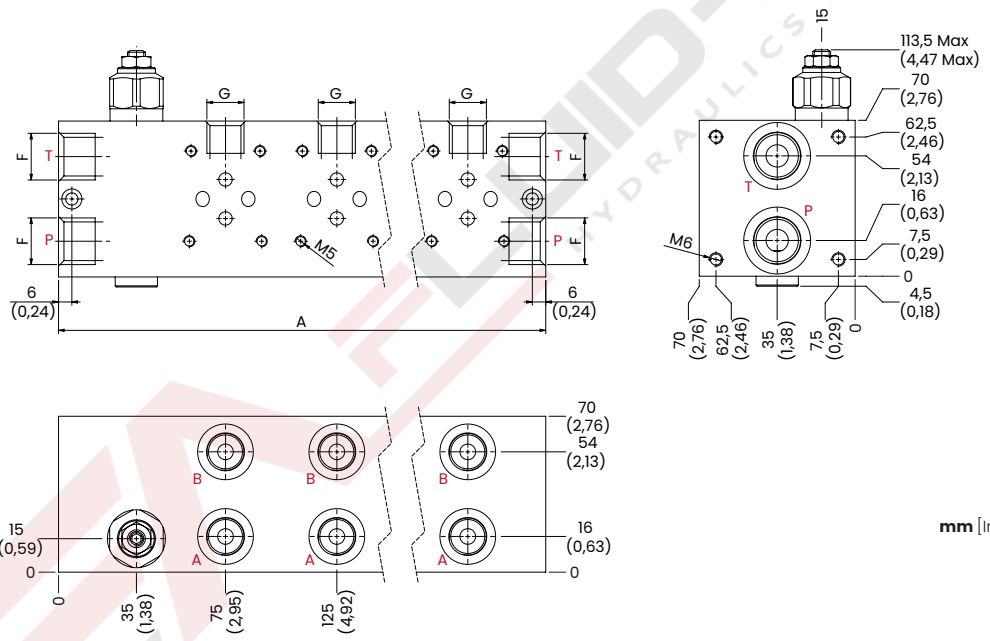

mm [Inches]

ORDERING CODE

CODE	TYPE	F PORTS	G	A	MAX FLOW l/min [USgpm]	MAX PRESSURE bar [PSI]	RANGE SPRING bar [PSI]	INCREASE TO TURN bar [PSI]	WEIGHT kg [lb]
FA6119	MM2C10	1/2 BSPP	3/8 BSPP	160 [6,29]	50 [13,3]	210 [3045]	10/70 [145/1015]	16,5 [239]	2,4 [5,3]
FA6120	MM3C10			210 [8,27]					3 [6,6]
FA6121	MM4C10			260 [10,24]					3,6 [8]
FA6122	MM5C10			310 [12,20]					4,3 [9,5]
FA6123	MM6C10			360 [14,17]					4,9 [10,8]
FA6101	MM2C21			160 [6,29]			20/210 [290/3045]	33 [479]	2,4 [5,3]
FA6102	MM3C21			210 [8,27]					3 [6,6]
FA6103	MM4C21			260 [10,24]					3,6 [8]
FA6104	MM5C21			310 [12,20]					4,3 [9,5]
FA6105	MM6C21			360 [14,17]					4,9 [10,8]
Aluminium body									

TAMPER PROOF CAP M8

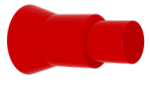

CODE
62200020

UPDATE. Sept. 2024 (v.05)

Mineral oil: DIN 51524 ISO 6743/4 | Oil viscosity: 15 to 250 cSt 15-250 mm2/s | Oil temperature: -4°F + 176°F -20°C +80°C | Ambient temperature: -4°F + 122°F -20°C +50°C | Max contamination index with filter: 5 to 250 cSt 15-250 mm2/s | It is necessary a filter use to protect the valve (advised filtration 15 µm) | Max leakage: 0,25 cm3/min - 5 drops/min at 80% of the calibration pressure

Via Guadiana n° 8/1, 42124 Reggio Emilia - ITALY | www.fluid-app.it | sales@fluid-app.it

MM CETOP 3 - WITHOUT RELIEF VALVE

CETOP 3 MULTISTATION MANIFOLDS

The MM aluminum manifolds allow the assembly of 2 or more CETOP 3 solenoid valves, they are supplied without a relief valve.

HYDRAULIC CIRCUIT

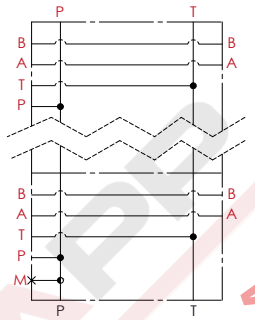

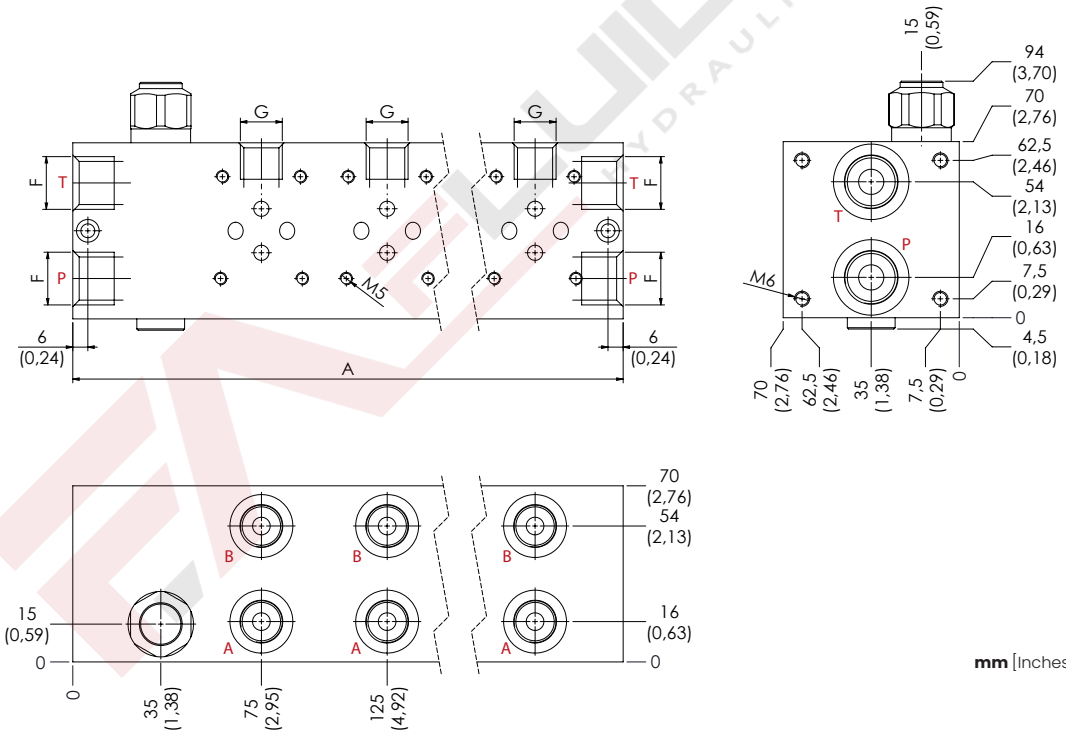

mm [Inches]

ORDERING CODE

CODE	TYPE	F PORTS	G	A	MAX FLOW l/min [USgpm]	MAX PRESSURE bar [PSI]	WEIGHT kg [lb]
FA6106	MM2	1/2 BSPP	3/8 BSPP	160 [6,29]	50 [13,3]	210 [3045]	2,4 [5,3]
FA6107	MM3			210 [8,27]			3 [6,6]
FA6108	MM4			260 [10,24]			3,6 [8]
FA6109	MM5			310 [12,20]			4,3 [9,5]
FA6110	MM6			360 [14,17]			4,9 [10,8]
Aluminium body							

UPDATE. May 2024 (v.02)

Mineral oil: DIN 51524 ISO 6743/4 | Oil viscosity: 15 to 250 cSt 15-250 mm2/s | Oil temperature: -4°F + 176°F -20°C +80°C | Ambient temperature: -4°F + 122°F -20°C +50°C | Max contamination index with filter: 5 to 250 cSt 15-250 mm2/s | It is necessary a filter use to protect the valve (advised filtration 15 µm) | Max leakage: 0,25 cm3/min - 5 drops/min at 80% of the calibration pressure

Via Guadiana n° 8/1, 42124 Reggio Emilia - ITALY | www.fluid-app.it | sales@fluid-app.it

D3H HIGH PRESSURE FLOW DIVERTERS

3 WAYS FLOW DIVERTERS

The 3 ways steel flow diverters are used when it is necessary to divert the oil flow.

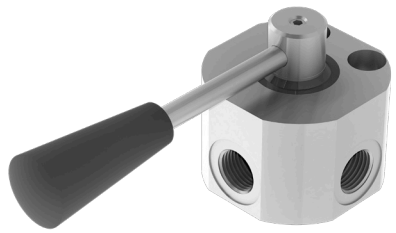

HYDRAULIC CIRCUIT

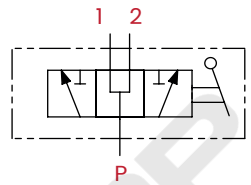

A (Open center)

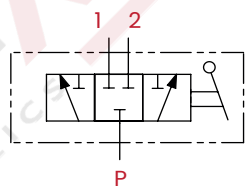

C (Closed center)

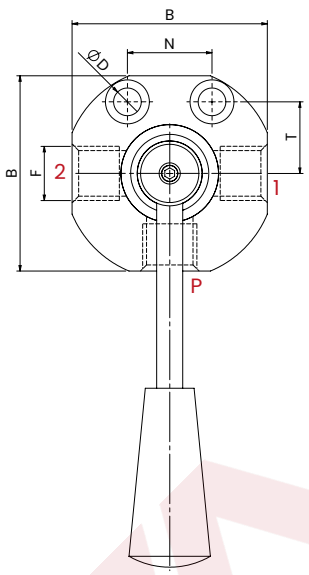

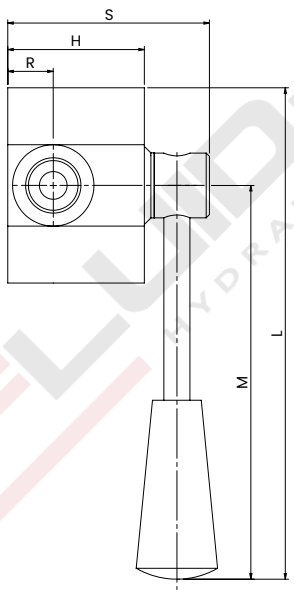

PERFORMANCES

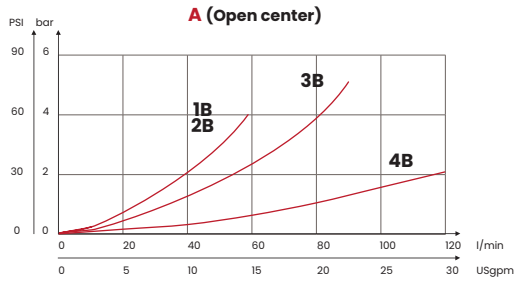

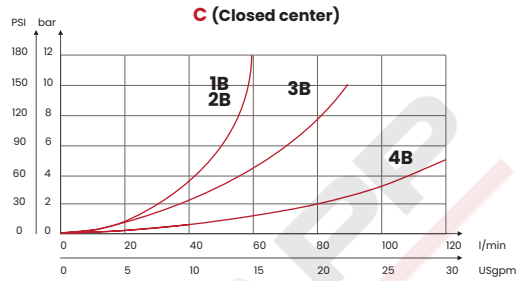

ORDERING CODE

CODE	TYPE	F	MAX FLOW l/min [USgpm]	MAX PRESSURE bar [PSI]	WEIGHT kg [lbt]
FA9103	D3HA1B	1/4 BSPP	60 [15,8]	500 [7250]	0,95 [2,09]
FA9104	D3HA2B	3/8 BSPP			
FA9105	D3HA3B	1/2 BSPP	90 [23,8]		1,25 [2,75]
FA9106	D3HA4B	3/4 BSPP	120 [31,7]		2,14 [4,71]
FA9107	D3HC1B	1/4 BSPP	60 [15,8]		0,95 [2,09]
FA9108	D3HC2B	3/8 BSPP			
FA9109	D3HC3B	1/2 BSPP	90 [23,8]		1,25 [2,75]
FA9110	D3HC4B	3/4 BSPP	120 [31,7]		2,14 [4,71]

TECHNICAL CHARACTERISTICS

mm [Inches]

F	B	H	L	Ø D	M	N	R	S	T
1/4 BSPP	60 [2,36]	42 [1,65]	150 [5,90]	8,5 [0,33]	120 [4,72]	26 [1,02]	14 [0,55]	62 [2,44]	22 [0,86]
3/8 BSPP									
1/2 BSPP	65 [2,56]	45 [1,77]	152,5 [6]				16 [0,63]	65 [2,56]	
3/4 BSPP	80 [3,15]	54 [2,12]	160 [6,30]	10,5 [0,41]		32 [1,26]	23 [0,90]	75 [2,95]	26 [1,02]

UPDATE. May 2024 (v.01)

Mineral oil: DIN 51524 ISO 6743/4 | Oil viscosity: 15 to 250 cSt 15-250 mm2/s | Oil temperature: -4°F + 176°F -20°C +80°C | Ambient temperature: -4°F + 122°F -20°C +50°C | Max contamination index with filter: 5 to 250 cSt 15-250 mm2/s | It is necessary a filter use to protect the valve (advised filtration 15 µm)

Via Guadiana n° 8/1, 42124 Reggio Emilia - ITALY | www.fluid-app.it | sales@fluid-app.it

D6H *HIGH PRESSURE FLOW DIVERTERS*

6 WAYS FLOW DIVERTERS

The 6 ways steel flow diverters are used when it is necessary to divert the oil flow.

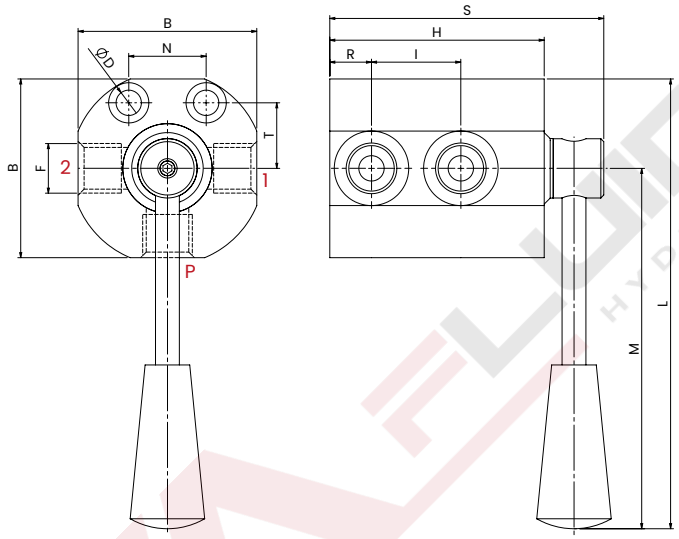

HYDRAULIC CIRCUIT

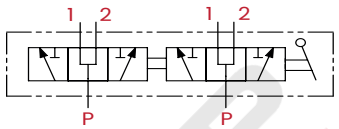

A (Open center)

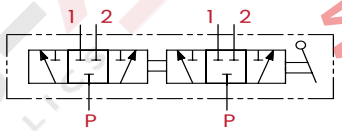

C (Closed center)

PERFORMANCES

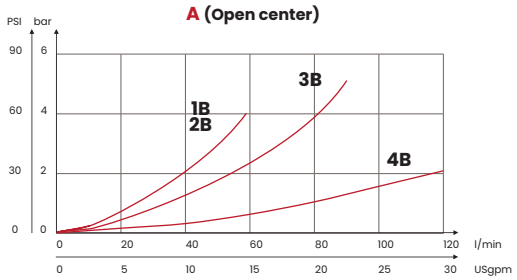

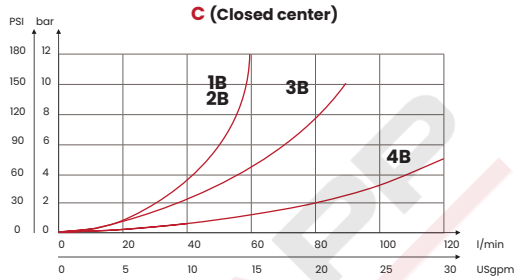

ORDERING CODE

CODE	TYPE	F	MAX FLOW l/min [USgpm]	MAX PRESSURE bar [PSI]	WEIGHT kg [lbt]
FA9111	D6HA1B	1/4 BSPP	60+60 [15,8+15,8]	500 [7250]	1,71 [3,76]
FA9112	D6HA2B	3/8 BSPP			
FA9113	D6HA3B	1/2 BSPP	90+90 [23,8+23,8]		2,25 [4,95]
FA9114	D6HA4B	3/4 BSPP	120+120 [31,7+31,7]		3,84 [8,45]
FA9115	D6HC1B	1/4 BSPP	60+60 [15,8+15,8]		1,71 [3,76]
FA9116	D6HC2B	3/8 BSPP			
FA9117	D6HC3B	1/2 BSPP	90+90 [23,8+23,8]		2,25 [4,95]
FA9118	D6HC4B	3/4 BSPP	120+120 [31,7+31,7]		3,84 [8,45]

TECHNICAL CHARACTERISTICS

mm [Inches]

F	B	H	L	Ø D	I	M	N	S	R	T
1/4 BSPP	60 [2,36]	72 [2,83]	150 [5,90]	8,5 [0,33]	30 [1,18]	120 [4,72]	26 [1,02]	92 [3,62]	14 [0,55]	22 [0,86]
3/8 BSPP										
1/2 BSPP	65 [2,56]	83 [3,26]	152,5 [6]		38 [1,49]			103 [4,05]	16 [0,63]	
3/4 BSPP	80 [3,15]	94 [3,70]	160 [6,30]	10,5 [0,41]	44 [1,73]		32 [1,26]	119 [4,68]	22 [0,86]	26 [1,02]

UPDATE. May 2024 (v.01)

Mineral oil: DIN 51524 ISO 6743/4 | Oil viscosity: 15 to 250 cSt 15-250 mm2/s | Oil temperature: -4°F + 176°F -20°C +80°C | Ambient temperature: -4°F + 122°F -20°C +50°C | Max contamination index with filter: 5 to 250 cSt 15-250 mm2/s | It is necessary a filter use to protect the valve (advised filtration 15 µm)

Via Guadiana n° 8/1, 42124 Reggio Emilia - ITALY | www.fluid-app.it | sales@fluid-app.it

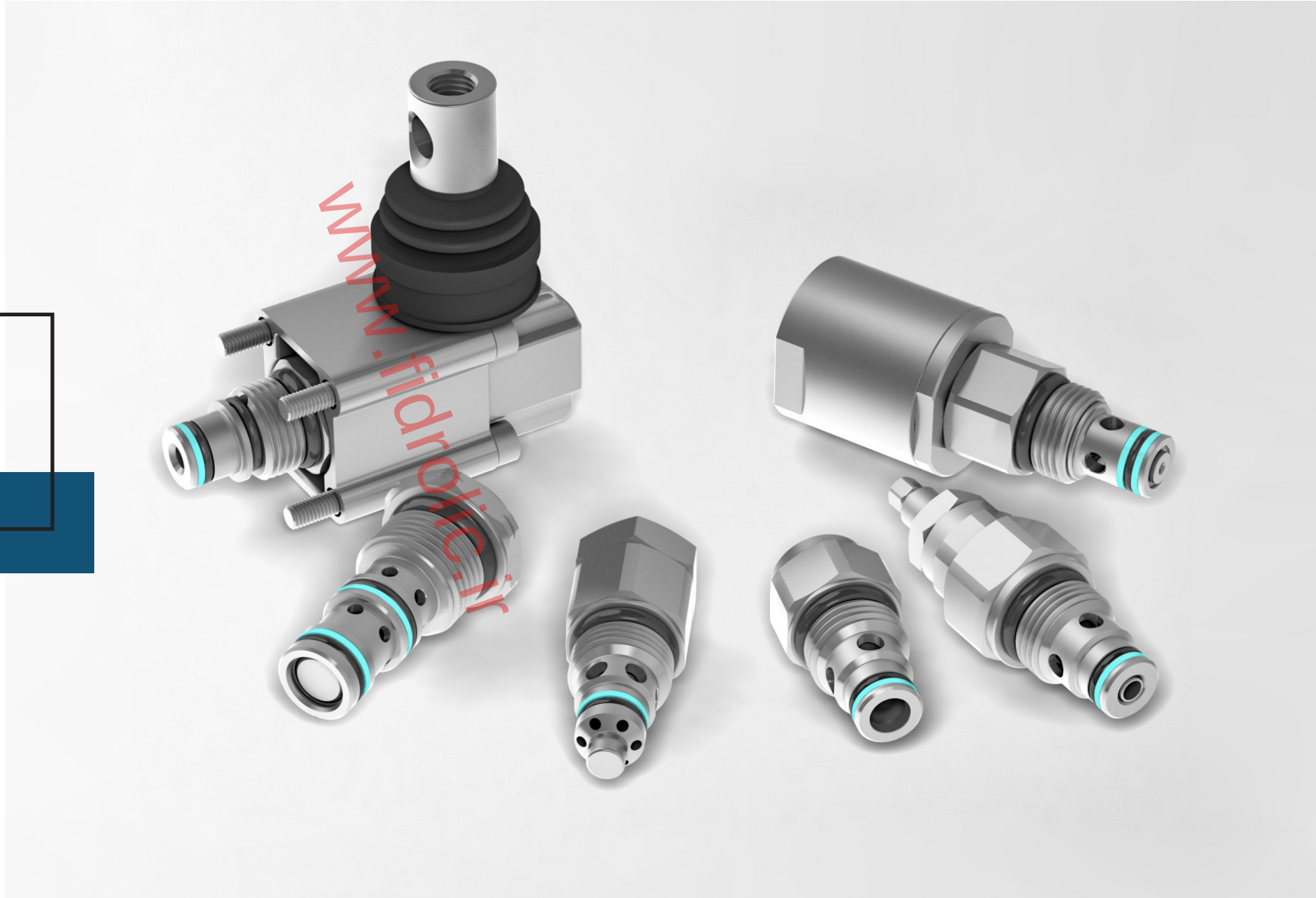

M20 *SAE8/2 - 30 l/min - 350 bar*

DIRECT ACTING RELIEF VALVES - NON GUIDED VERSION

The purpose of the M20 relief valves is to protect the hydraulic system from malfunctions or failures caused by excessive pressure in the circuit.
Non-guided version, with mechanical stop under pressure.

HYDRAULIC CIRCUIT

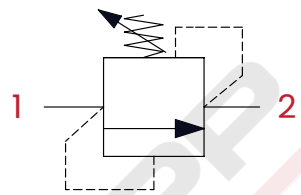

PERFORMANCES

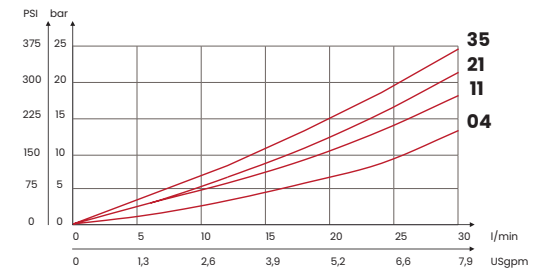

TAMPER PROOF CAP

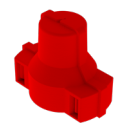

CODE
KIT137

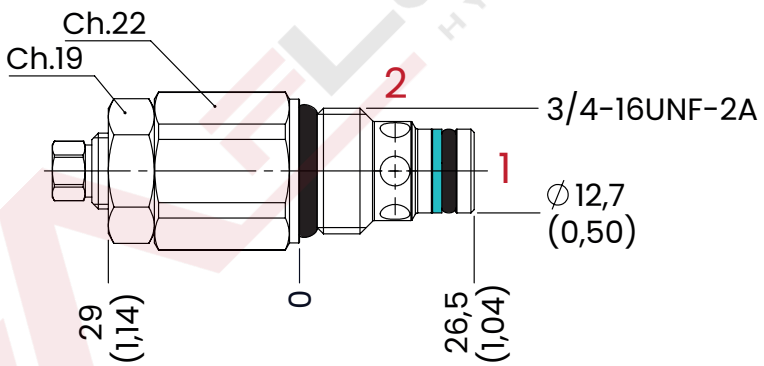

mm [Inches]

ORDERING CODE

CODE	TYPE	CAVITY	MAX FLOW l/min [USgpm]	MAX PRESSURE bar [PSI]	RAGE SPRING bar [PSI]	INCREASE TO TURN bar [PSI]	TIGHTENING TORQUE Nm [lbt ft]	WEIGHT kg [lb]
FA7001	M20C04	SAE8/2 3/4-16UNF-2B See cavity paragraph p. 222	30 [8]	350 [5075]	10/40 [145/580]	20 [290]	30 [22]	0,11 [0,24]
FA7002	M20C11				20/110 [290/1959]	40 [580]		
FA7003	M20C21				30/210 [435/3045]	70 [1015]		
FA7004	M20C35				40/350 [580/5075]	130 [1885]		

UPDATE. Jan. 2024 (v.05)

Mineral oil: DIN 51524 ISO 6743/4 | Oil viscosity: 15 to 250 cSt 15-250 mm2/s | Oil temperature: -4°F + 176°F -20°C +80°C | Ambient temperature: -4°F + 122°F -20°C +50°C | Max contamination index with filter: 5 to 250 cSt 15-250 mm2/s | It is necessary a filter use to protect the valve (advised filtration 15 µm) | Max leakage: 0,25 cm3/min - 5 drops/min at 80% of the calibration pressure

Via Guadiana n° 8/1, 42124 Reggio Emilia - ITALY | www.fluid-app.it | sales@fluid-app.it

M22 SAE 8/2 - 30 l/min - 350 bar

DIRECT ACTING RELIEF VALVES - GUIDED VERSION

The purpose of the M22 relief valves is to protect the hydraulic system from malfunctions or failures caused by excessive pressure in the circuit. Guided version, with mechanical stop under pressure.

M22C

M22V

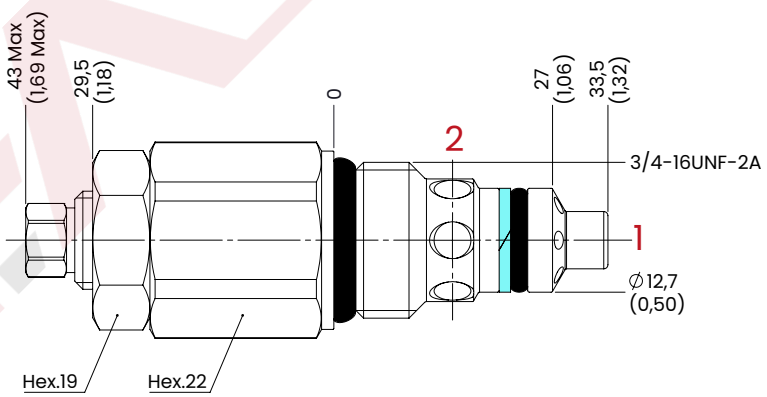

HYDRAULIC CIRCUIT

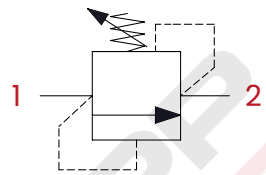

PERFORMANCES

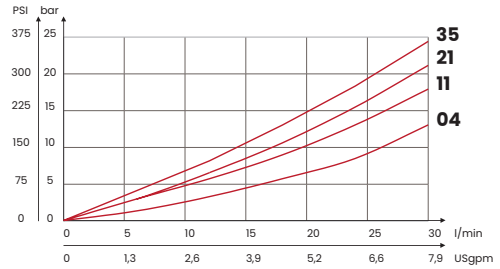

TAMPER PROOF CAP

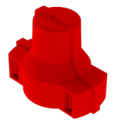

CODE
KIT137

ORDERING CODE

CODE	TYPE	CAVITY	MAX FLOW l/min [USgpm]	MAX PRESSURE bar [PSI]	RAGE SPRING bar [PSI]	INCREASE TO TURN bar [PSI]	TIGHTENING TORQUE Nm [lbt ft]	WEIGHT kg [lbt]
FA6045	M22C04	SAE8/2 3/4-16UNF-2B See cavity paragraph p. 222	30 [8]	350 [5075]	10/60 [145/870]	12 [174]	30 [22]	0,15 [0,32]
FA6046	M22C11				40/110 [580/1595]	40 [580]		
FA6047	M22C21				80/250 [1160/3625]	70 [1015]		
FA6048	M22C35				120/350 [1740/5075]	130 [1885]		
FA6049	M22V04				10/60 [145/870]	12 [174]		
FA6050	M22V11				40/120 [580/1595]	40 [580]		
FA6051	M22V21				80/250 [1160/3625]	70 [1015]		
FA6052	M22V35				120/350 [1740/5075]	130 [1885]		

UPDATE September 2023 (v.04)

Mineral oil: DIN 51524 ISO 6743/4 | Oil viscosity: 15 to 250 cSt 15-250 mm2/s | Oil temperature: -4°F + 176°F -20°C +80°C | Ambient temperature: -4°F + 122°F -20°C +50°C | Max contamination index with filter: 5 to 250 cSt 15-250 mm2/s | It is necessary a filter use to protect the valve (advised filtration 15 µm) | Max leakage: 0,25 cm3/min - 5 drops/min at 80% of the calibration pressure

Via Guadiana n° 8/1, 42124 Reggio Emilia - ITALY | www.fluid-app.it | sales@fluid-app.it

M30 *M20 X 1,5 - 50 l/min - 350 bar*

DIRECT ACTING RELIEF VALVES - GUIDED VERSION

The purpose of the M30 pressure relief valves is to protect the hydraulic system from malfunctions or failures caused by excessively high pressures in the circuit.

HYDRAULIC CIRCUIT

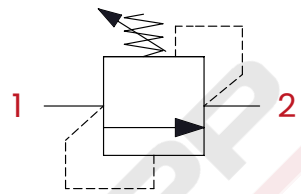

PERFORMANCES

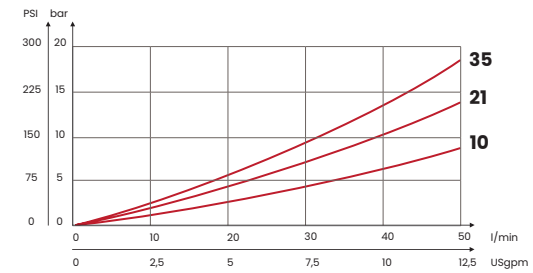

TAMPER PROOF CAP M10

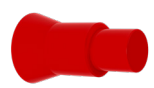

CODE
62200021

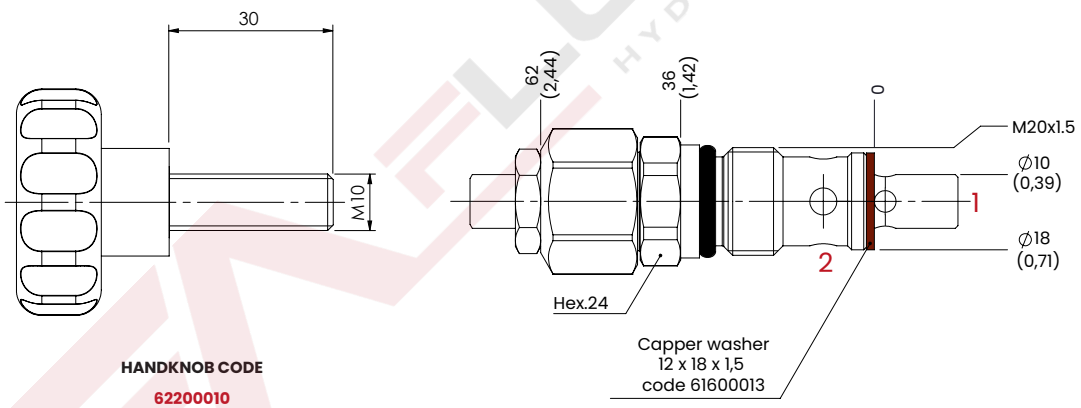

HANDKNOB CODE

62200010

mm [Inches]

ORDERING CODE

CODE	TYPE	CAVITY	MAX FLOW l/min [USgpm]	MAX PRESSURE bar [PSI]	RAGE SPRING bar [PSI]	INCREASE TO TURN bar [PSI]	M20X1,5 TIGHTENING TORQUE Nm [lbt ft]	WEIGHT kg [lb]
FA7041	M30C10	FC002 M20X1,5 See cavity paragraph p. 226	50 [13,3]	350 [5075]	10/70 [145/1015]	16,5 [239]	30 [22]	0,16 [0,35]
FA7042	M30C21				20/210 [290/2045]	33 [479]		
FA7043	M30C35				70/350 [1015/5075]	70 [1015]		

UPDATE. Jan. 2024 (v.04)

Mineral oil: DIN 51524 ISO 6743/4 | Oil viscosity: 15 to 250 cSt 15-250 mm2/s | Oil temperature: -4°F + 176°F -20°C +80°C | Ambient temperature: -4°F + 122°F -20°C +50°C | Max contamination index with filter: 5 to 250 cSt 15-250 mm2/s | It is necessary a filter use to protect the valve (advised filtration 15 µm) | Max leakage: 0,25 cm3/min - 5 drops/min at 80% of the calibration pressure

Via Guadiana n° 8/1, 42124 Reggio Emilia - ITALY | www.fluid-app.it | sales@fluid-app.it

M40 *M20 X 1,5 - 50 l/min - 350 bar*

DIRECT ACTING RELIEF VALVES - GUIDED VERSION

The purpose of the M40 pressure relief valves is to protect the hydraulic system from malfunctions or failures caused by excessively high pressures in the circuit.

HYDRAULIC CIRCUIT

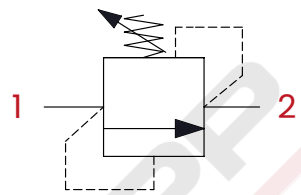

PERFORMANCES

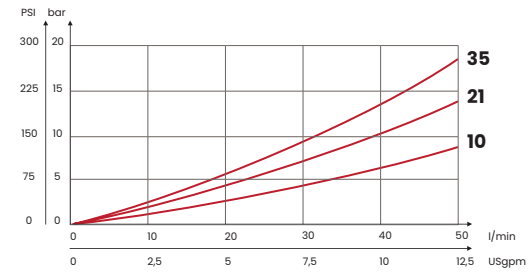

OPTIONAL TOOL

TOOL
CHI07

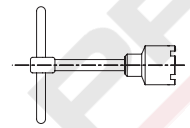

TAMPER PROOF CAP M8

CODE
62200020

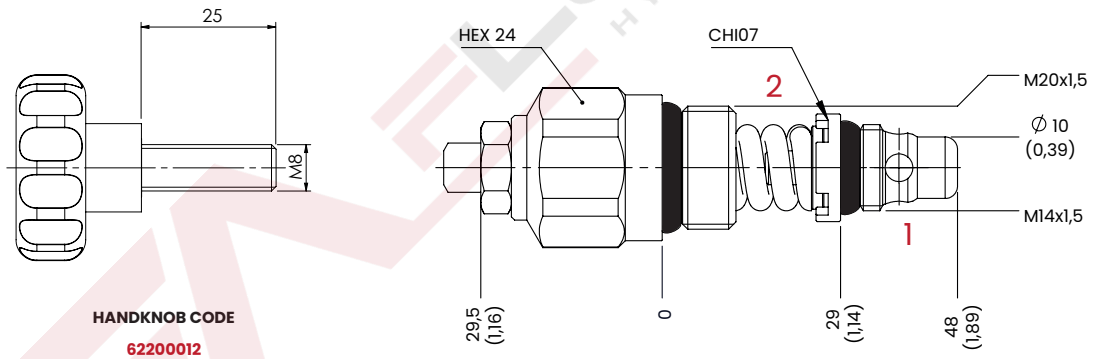

HANDKNOB CODE

62200012

mm [Inches]

ORDERING CODE

CODE	TYPE	CAVITY	MAX FLOW l/min [USgpm]	MAX PRESSURE bar [PSI]	RAGE SPRING bar [PSI]	INCREASE TO TURN bar [PSI]	M14X1,5 TIGHTENING TORQUE Nm [lbt ft]	M20X1,5 TIGHTENING TORQUE Nm [lbt ft]	WEIGHT kg [lb]
FA7009	M40C10	FC003 M20X1,5 See cavity paragraph p. 227	50 [13,3]	350 [5075]	10/70 [145/1015]	16,5 [239]	10 [7]	40 [30]	0,13 [0,29]
FA7010	M40C21				20/210 [290/2045]	33 [479]			
FA7011	M40C35				70/350 [1015/5075]	70 [1015]			

UPDATE. Aug. 2024 (v.06)

Mineral oil: DIN 51524 ISO 6743/4 | Oil viscosity: 15 to 250 cSt 15-250 mm2/s | Oil temperature: -4°F + 176°F -20°C +80°C | Ambient temperature: -4°F + 122°F -20°C +50°C | Max contamination index with filter: 5 to 250 cSt 15-250 mm2/s | It is necessary a filter use to protect the valve (advised filtration 15 µm) | Max leakage: 0,25 cm3/min - 5 drops/min at 80% of the calibration pressure

Via Guadiana n° 8/1, 42124 Reggio Emilia - ITALY | www.fluid-app.it | sales@fluid-app.it

M42 SAE 10/2 - 50 l/min - 350 bar

DIRECT ACTING RELIEF VALVES - GUIDED VERSION

The purpose of the M42 pressure relief valves is to protect the hydraulic system from malfunctions or failures caused by excessively high pressures in the circuit.

HYDRAULIC CIRCUIT

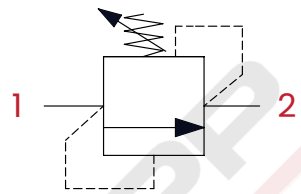

PERFORMANCES

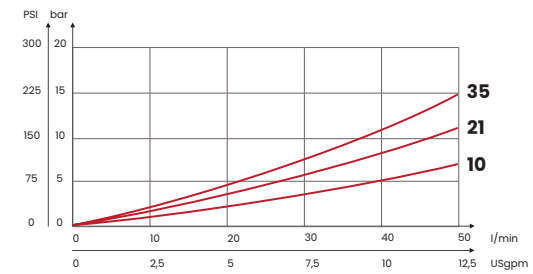

TAMPER PROOF CAP M10

CODE
62200021

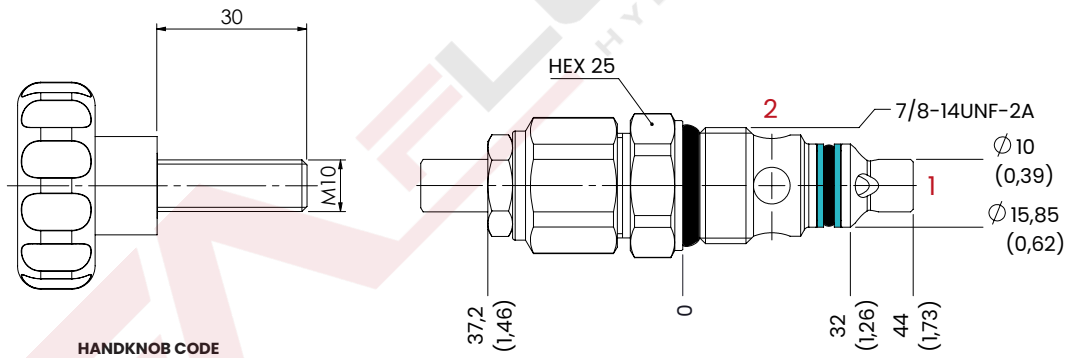

HANDKNOB CODE

62200010

mm [Inches]

ORDERING CODE

CODE	TYPE	CAVITY	MAX FLOW l/min [USgpm]	MAX PRESSURE bar [PSI]	RAGE SPRING bar [PSI]	INCREASE TO TURN bar [PSI]	TIGHTENING TORQUE Nm [lbt ft]	WEIGHT kg [lb]
FA7012	M42C10	SAE10/2 7/8-14UN-F-2B See cavity paragraph p. 222	50 [13,5]	350 [5075]	10/70 [145/1015]	16 [232]	40 [30]	0,18 [0,37]
FA7013	M42C21				20/210 [290/2045]	40 [580]		
FA7014	M42C35				70/350 [1015/5075]	108 [1566]		

UPDATE. July 2024 (v.07)

Mineral oil: DIN 51524 ISO 6743/4 | Oil viscosity: 15 to 250 cSt 15-250 mm2/s | Oil temperature: -4°F + 176°F -20°C +80°C | Ambient temperature: -4°F + 122°F -20°C +50°C | Max contamination index with filter: 5 to 250 cSt 15-250 mm2/s | It is necessary a filter use to protect the valve (advised filtration 15 µm) | Max leakage: 0,25 cm3/min - 5 drops/min at 80% of the calibration pressure

Via Guadiana n° 8/1, 42124 Reggio Emilia - ITALY | www.fluid-app.it | sales@fluid-app.it

M80 *M24 X 1,5 - 80 l/min - 350 bar*

DIRECT ACTING RELIEF VALVES - GUIDED VERSION

The purpose of the M80 pressure relief valves is to protect the hydraulic system from malfunctions or failures caused by excessively high pressures in the circuit.

HYDRAULIC CIRCUIT

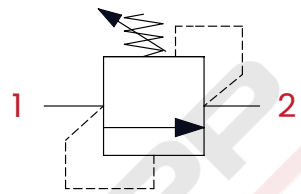

PERFORMANCES

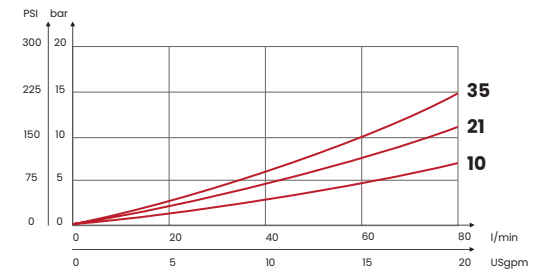

TAMPER PROOF CAP M10

CODE
62200021

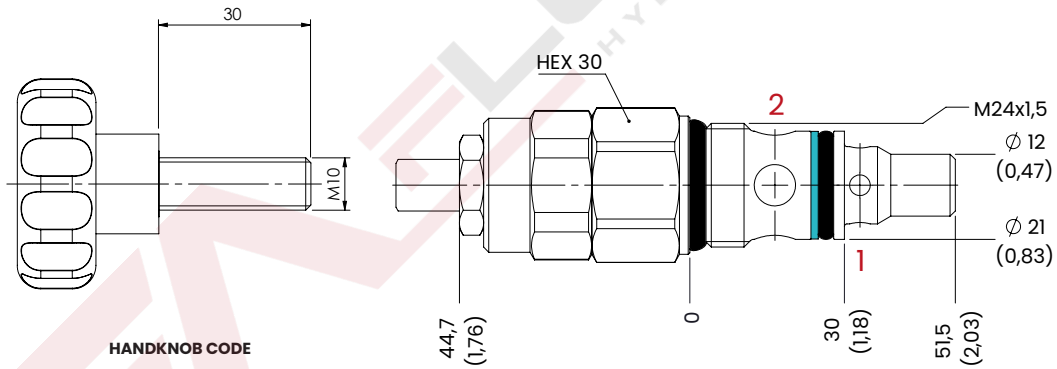

HANDKNOB CODE

62200010

mm [Inches]

ORDERING CODE

CODE	TYPE	CAVITY	MAX FLOW **l/min** [USgpm]	MAX PRESSURE **bar** [PSI]	RAGE SPRING **bar** [PSI]	INCREASE TO TURN **bar** [PSI]	TIGHTENING TORQUE **Nm** [lbt ft]	WEIGHT **kg** [lb]
FA7015	M80C10	FC005 M24X1,5 See cavity paragraph p. 229	80 [21,1]	350 [5075]	10/100 [145/1450]	25 [362]	60 [44]	0,25 [0,55]
FA7016	M80C25				20/250 [290/3625]	40 [580]		
FA7017	M80C35				50/350 [725/5075]	90 [1305]		

UPDATE. May 2024 (v.06)

Mineral oil: DIN 51524 ISO 6743/4 | Oil viscosity: 15 to 250 cSt 15-250 mm2/s | Oil temperature: -4°F + 176°F -20°C +80°C | Ambient temperature: -4°F + 122°F -20°C +50°C | Max contamination index with filter: 5 to 250 cSt 15-250 mm2/s | It is necessary a filter use to protect the valve (advised filtration 15 µm) | Max leakage: 0,25 cm3/min - 5 drops/min at 80% of the calibration pressure

Via Guadiana n° 8/1, 42124 Reggio Emilia - ITALY | www.fluid-app.it | sales@fluid-app.it

UC2 SAE8/2 - 35 l/min - 350 bar

CHECK VALVES POPPET TYPE

The UC2 cartridge check valve allows free oil flow in one direction and blocks it in the opposite direction.

HYDRAULIC CIRCUIT

PERFORMANCES

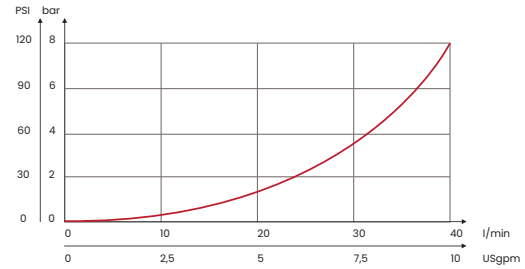

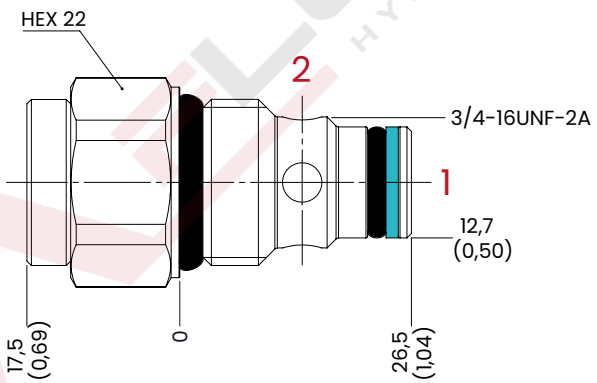

mm [Inches]

ORDERING CODE

CODE	TYPE	CAVITY	MAX FLOW l/min [USgpm]	MAX PRESSURE bar [PSI]	SPRING bar [PSI]	TIGHTENING TORQUE Nm [lbt ft]	WEIGHT kg [lb]
FA7018	UC205	SAE8/2 3/4-16UNF-2B See cavity paragraph p. 222 Poppet type	35 [9,2]	350 [5075]	0,5 [7,3]	30 [22]	0,08 [0,17]
FA7019	UC230				3 [43,5]		
FA7020	UC245				4,5 [65]		
FA7021	UC260				6 [87]		
FA7044	US205	SAE8/2 3/4-16UNF-2B Ball type	35 [9,2]	350 [5075]	0,5 [7,3]	30 [22]	0,08 [0,17]

UPDATE. March 2023 (v.07)

Mineral oil: DIN 51524 ISO 6743/4 | Oil viscosity: 15 to 250 cSt 15-250 mm2/s | Oil temperature: -4°F + 176°F -20°C +80°C | Ambient temperature: -4°F + 122°F -20°C +50°C | Max contamination index with filter: 5 to 250 cSt 15-250 mm2/s | It is necessary a filter use to protect the valve (advised filtration 15 µm) | Max leakage: 0,25 cm3/min - 5 drops/min

Via Guadiana n° 8/1, 42124 Reggio Emilia - ITALY | www.fluid-app.it | sales@fluid-app.it

UC3 SAE10/2 - 80 l/min - 350 bar

CHECK VALVES POPPET TYPE

The UC3 cartridge check valve allows free oil flow in one direction and blocks it in the opposite direction.

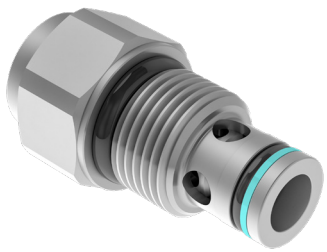

HYDRAULIC CIRCUIT

PERFORMANCES

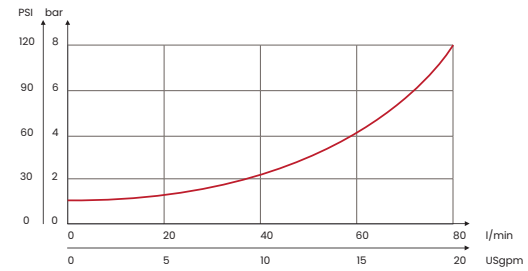

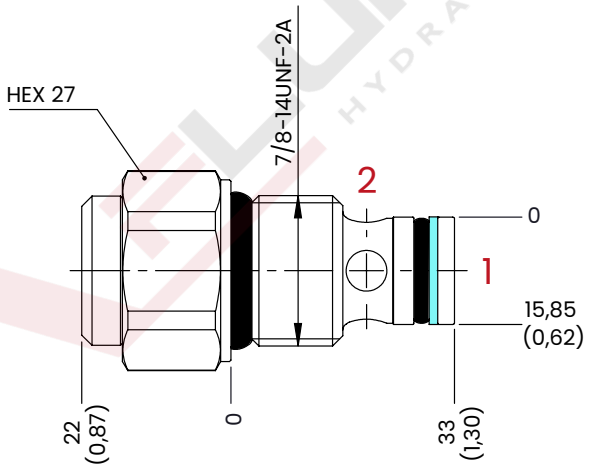

mm [Inches]

ORDERING CODE

CODE	TYPE	CAVITY	SPRING **bar** [PSI]	MAX FLOW **l/min** [USgpm]	MAX PRESSURE **bar** [PSI]	TIGHTENING TORQUE **Nm** [lbt ft]	WEIGHT **kg** [lb]
FA7060	UC305	SAE10/2 7/8-14UNF-2B	0,5 [7,3] Standard	80 [21,13]	350 [5075]	40 [29,5]	0,14 [0,31]
FA7061	UC345	See cavity paragraph p. 222	4,5 [65]				

UPDATE. May 2023 (v.02)

Mineral oil: DIN 51524 ISO 6743/4 | Oil viscosity: 15 to 250 cSt 15-250 mm2/s | Oil temperature: -4°F + 176°F -20°C +80°C | Ambient temperature: -4°F + 122°F -20°C +50°C | Max contamination index with filter: 5 to 250 cSt 15-250 mm2/s | It is necessary a filter use to protect the valve (advised filtration 15 µm) | Max leakage: 0,25 cm3/min - 5 drops/min

Via Guadiana n° 8/1, 42124 Reggio Emilia - ITALY | www.fluid-app.it | sales@fluid-app.it

CU2 SAE 8/2 - 40 l/min - 350 bar

UNIDIRECTIONAL FLOW CONTROL VALVES

The one-way flow control valves allow regulation in one direction and free passage in the opposite direction.

CU2C

CU2V

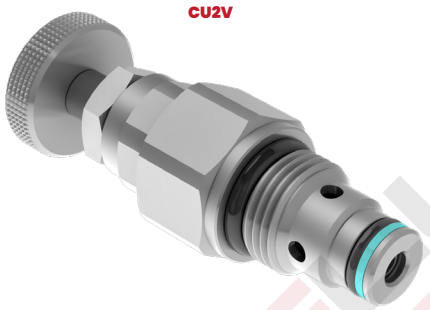

HYDRAULIC CIRCUIT

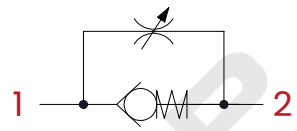

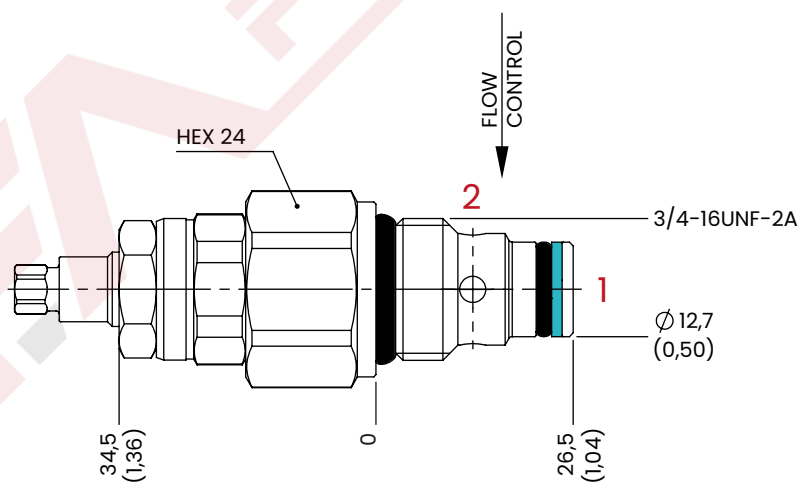

mm [Inches]

PERFORMANCES

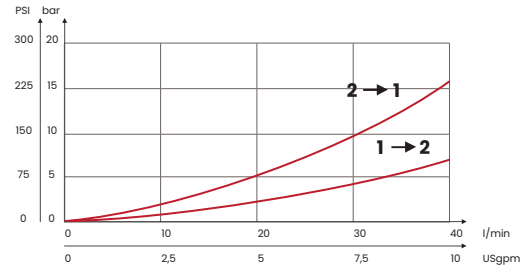

ORDERING CODE

CODE	TYPE	CAVITY	MAX FLOW l/min [USgpm]	MAX PRESSURE bar [PSI]	TIGHTENING TORQUE Nm [lbt ft]	WEIGHT kg [lb]
FA7022	CU2C	SAE8/2 3/4-16UNF-2B	40 [10,6]	350 [5075]	30 [22]	0,13 [0,30]
FA7023	CU2V	See cavity paragraph p. 222				

UPDATE. March 2023 (v.04)

Mineral oil: DIN 51524 ISO 6743/4 | Oil viscosity: 15 to 250 cSt 15-250 mm2/s | Oil temperature: -4°F + 176°F -20°C +80°C | Ambient temperature: -4°F + 122°F -20°C +50°C | Max contamination index with filter: 5 to 250 cSt 15-250 mm2/s | It is necessary a filter use to protect the valve (advised filtration 15 µm) | Max leakage: 0,25 cm3/min - 5 drops/min at 80% of the calibration pressure

Via Guadiana n° 8/1, 42124 Reggio Emilia - ITALY | www.fluid-app.it | sales@fluid-app.it

CB2 SAE8/2 - 40 l/min - 350 bar

BIDIRECTIONAL FLOW CONTROL VALVES

Bidirectional flow control valves, allow flow regulation in both directions.

CB2C

CB2V

HYDRAULIC CIRCUIT

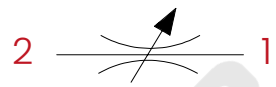

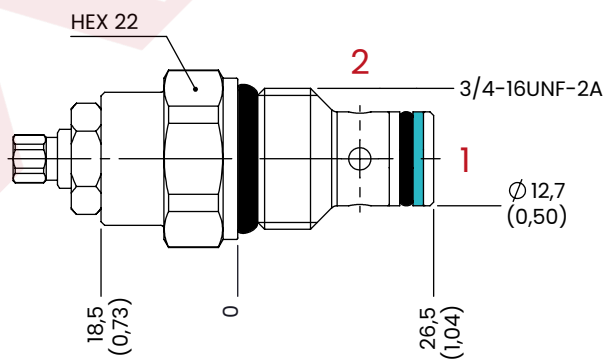

mm [Inches]

PERFORMANCES

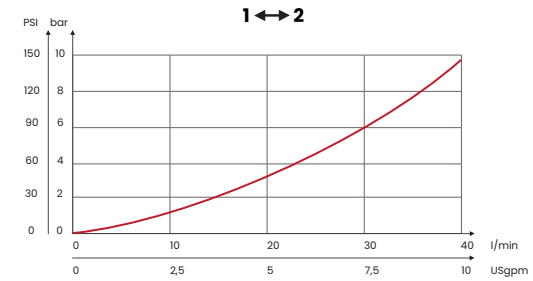

ORDERING CODE

CODE	TYPE	CAVITY	MAX FLOW l/min [USgpm]	MAX PRESSURE bar [PSI]	TIGHTENING TORQUE Nm [lbt ft]	WEIGHT kg [lb]
FA7024	CB2C	SAE8/2 3/4-16UNF-2B See cavity paragraph p. 222	40 [10,6]	350 [5075]	30 [22]	0,1 [0,22]
FA7025	CB2V					0,12 [0,26]

Mineral oil: DIN 51524 ISO 6743/4 | Oil viscosity: 15 to 250 cSt 15-250 mm2/s | Oil temperature: -4°F + 176°F -20°C +80°C | Ambient temperature: -4°F + 122°F -20°C +50°C | Max contamination index with filter: 5 to 250 cSt 15-250 mm2/s | It is necessary a filter use to protect the valve (advised filtration 15 µm)

Via Guadiana n° 8/1, 42124 Reggio Emilia - ITALY | www.fluid-app.it | sales@fluid-app.it

VM2 *SAE 8/2 - 30 l/min - 350 bar*

EMERGENCY VALVES

The bidirectional valves, with direct action VM2 normally closed 2 ways 2 positions, allow manual intervention, the opening is obtained by manually pushing the rear button, removing the hand automatically the valve closes.

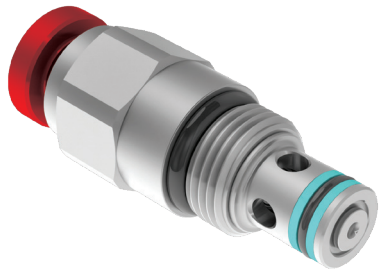

HYDRAULIC CIRCUIT

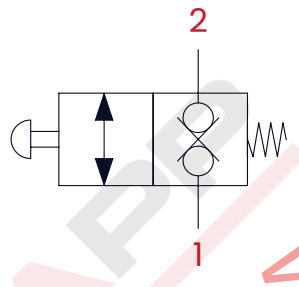

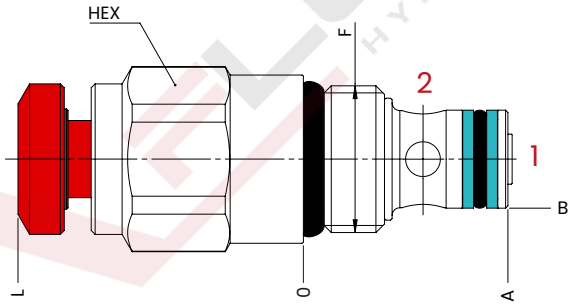

mm [Inches]

TECHNICAL CHARACTERISTICS

mm [Inches]

F	L	A	B	HEX
SAE8/2	37 [1,48]	26,5 [1,04]	12,7 [0,50]	22
M20X1,5	34 [1,34]	25 [0,98]	15 [0,59]	24

PERFORMANCES

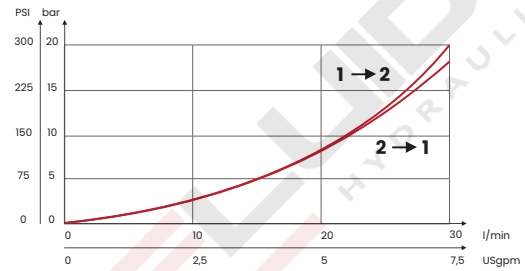

ORDERING CODE

CODE	TYPE	CAVITY	MAX FLOW **l/min** [USgpm]	MAX PRESSURE **bar** [PSI]	TIGHTENING TORQUE **Nm** [lbt ft]	WEIGHT **kg** [lb]
FA7026	VM2	SAE8/2 3/4-16UNF See cavity paragraph p. 222	30 [7,9]	350 [5075]	30 [22]	0,12 [0,26]
FA7067	VM20M	M20X1,5				

UPDATE. Mar. 2024 (v.05)

Mineral oil: DIN 51524 ISO 6743/4 | Oil viscosity: 15 to 250 cSt 15-250 mm2/s | Oil temperature: -4°F + 176°F -20°C +80°C | Ambient temperature: -4°F + 122°F -20°C +50°C | Max contamination index with filter: 5 to 250 cSt 15-250 mm2/s | It is necessary a filter use to protect the valve (advised filtration 15 µm)

Via Guadiana n° 8/1, 42124 Reggio Emilia - ITALY | www.fluid-app.it | sales@fluid-app.it

PM2 *SAE 8/2 - 2 cm³ - 200 bar*

HAND PUMPS

PM2 hand pumps are made in SAE8/2 cavities, often mounted as emergency on mini power packs or mounted on integrated blocks.

HYDRAULIC CIRCUIT

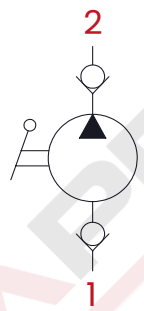

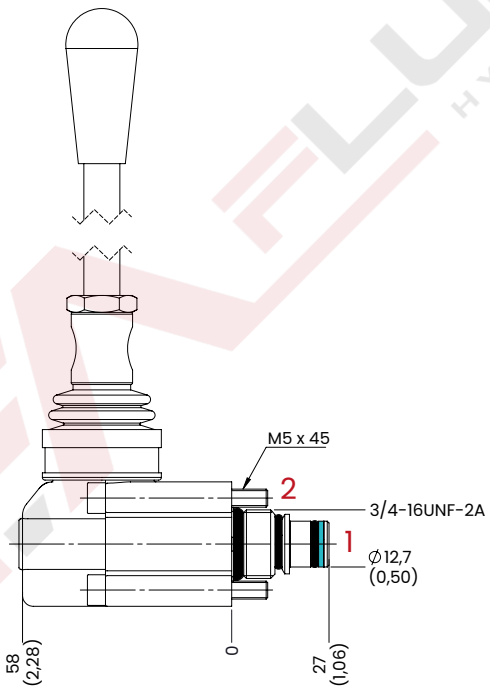

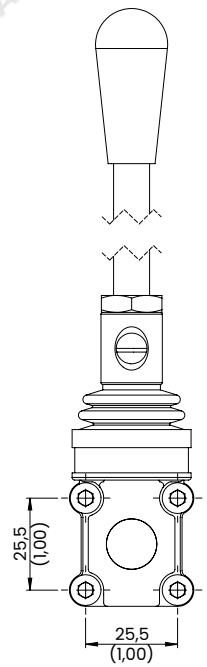

mm [Inches]

PERFORMANCES

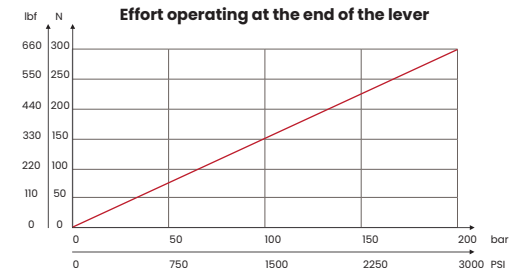

ORDERING CODE

CODE	TYPE	CAVITY	MAX PRESSURE **bar** [PSI]	DISPLACEMENT **cm³** [in³]	TIGHTENING TORQUE **Nm** [lbt ft]	WEIGHT **kg** [lb]
FA7027	**PM2**	**SAE8/2** **3/4-16UNF-2B** See cavity paragraph p. 222	200 [2900]	2 [0,12]	30 [22]	0,46 [1,01]

UPDATE. March 2023 (v.03)

Mineral oil: DIN 51524 ISO 6743/4 | Oil viscosity: 15 to 250 cSt 15-250 mm2/s | Oil temperature: -4°F + 176°F -20°C +80°C | Ambient temperature: -4°F + 122°F -20°C +50°C | Max contamination index with filter: 5 to 250 cSt 15-250 mm2/s | It is necessary a filter use to protect the valve (advised filtration 15 µm) | Max leakage: 0,25 cm3/min - 5 drops/min at 80% of the calibration pressure

Via Guadiana n° 8/1, 42124 Reggio Emilia - ITALY | www.fluid-app.it | sales@fluid-app.it

VC2 *SAE 8/2 - 30 l/min - 350 bar*

MANUALLY OPERATED 2-WAY 2-POSITION VALVES - POPPET DIRECT OPERATED

The VC2 manually operated valves are made in SAE8/2 cavities and operated manually by means of a lever.

HYDRAULIC CIRCUIT

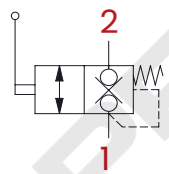

PERFORMANCES

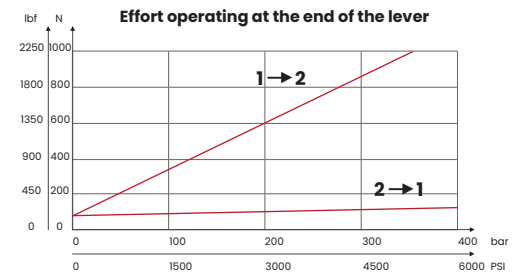

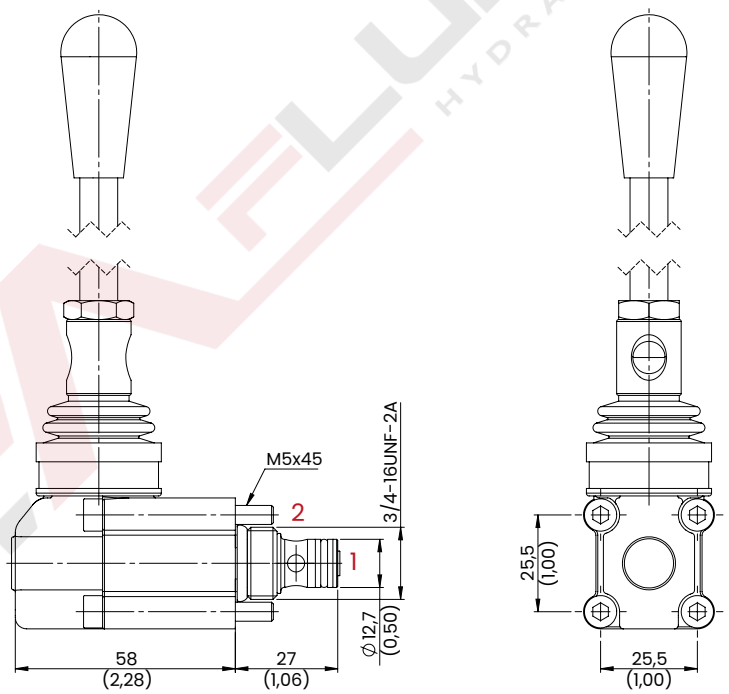

mm [Inches]

ORDERING CODE

CODE	TYPE	CAVITY	MAX FLOW l/min [USgpm]	MAX PRESSURE bar [PSI]	TIGHTENING TORQUE Nm [lbt ft]	WEIGHT kg [lb]
FA7062	VC2	SAE8/2 3/4-16UNF-2B See cavity paragraph p. 222	30 [7,9]	350 [5075]	30 [22]	0,45 [1]

UPDATE. October 2023 (v.01)

Mineral oil: DIN 51524 ISO 6743/4 | Oil viscosity: 15 to 250 cSt 15-250 mm2/s | Oil temperature: -4°F + 176°F -20°C +80°C | Ambient temperature: -4°F + 122°F -20°C +50°C | Max contamination index with filter: 5 to 250 cSt 15-250 mm2/s | It is necessary a filter use to protect the valve (advised filtration 15 µm) | Max leakage: 0,25 cm3/min - 5 drops/min at 80% of the calibration pressure

Via Guadiana n° 8/1, 42124 Reggio Emilia - ITALY | www.fluid-app.it | sales@fluid-app.it

DC2 *SAE 8/2 - 12 l/min - 250 bar*

FIXED FLOW CONTROL VALVES - PRESSURE COMPENSATED

The DC2 compensated fixed flow control valves are used to keep the descent speed of a load constant, regardless of the operating pressure and the value of the load.

HYDRAULIC CIRCUIT

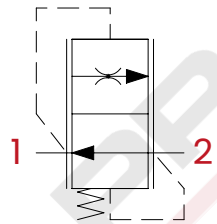

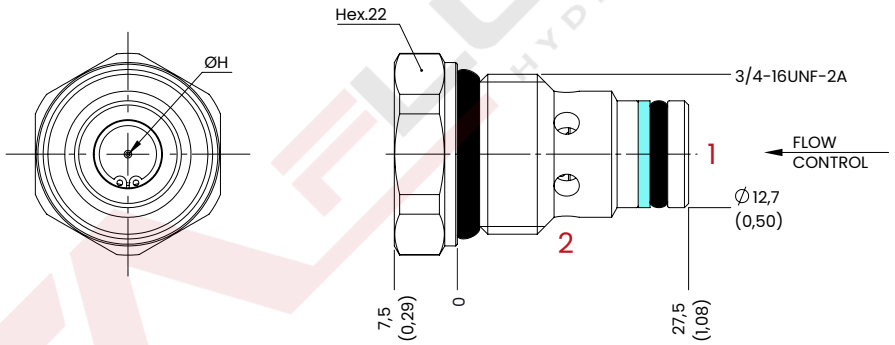

ORDERING CODE

CODE	TYPE	CAVITY	CONTROLLED FLOW AT 100 bar ± 10% l/min [USgpm]	Ø H mm [Inches]	MAX PRESSURE bar [PSI]	TIGHTENING TORQUE Nm [lbt ft]	WEIGHT kg [lb]
FA7046	DC201	SAE8/2 3/4-16UNF-2B See cavity paragraph p. 222	1 [0,26]	1 [0,04]	250 [3625]	30 [22]	0,06 [0,13]
FA7047	DC202		2 [0,53]	1,2 [0,05]			
FA7048	DC203		3 [0,79]	1,5 [0,06]			
FA7049	DC204		4 [1,06]	1,7 [0,07]			
FA7050	DC205		5 [1,32]	1,9 [0,07]			
FA7051	DC206		6 [1,58]	2,1 [0,08]			
FA7052	DC207		7 [1,85]	2,3 [0,09]			
FA7053	DC208		8 [2,11]	2,4 [0,09]			
FA7054	DC209		9 [2,38]	2,7 [0,11]			
FA7055	DC210		10 [2,64]	2,8 [0,11]			
FA7056	DC211		11 [2,90]	3,1 [0,12]			
FA7057	DC212		12 [3,17]	3,3 [0,13]			

mm [Inches]

UPDATE. March 2023 (v.01)

Mineral oil: DIN 51524 ISO 6743/4 | Oil viscosity: 15 to 250 cSt 15-250 mm2/s | Oil temperature: -4°F + 176°F -20°C +80°C | Ambient temperature: -4°F + 122°F -20°C +50°C | Max contamination index with filter: 5 to 250 cSt 15-250 mm2/s | It is necessary a filter use to protect the valve (advised filtration 15 µm)

Via Guadiana n° 8/1, 42124 Reggio Emilia - ITALY | www.fluid-app.it | sales@fluid-app.it

DR2 *SAE 8/2 - 35 l/min - 350 bar*

ADJUSTABLE FLOW CONTROL VALVES - PRESSURE COMPENSATED

Adjustable compensated flow control valve, used to keep the speed constant, regardless of the working pressure.

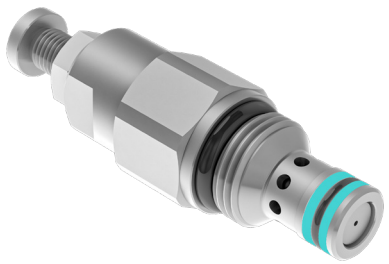

HYDRAULIC CIRCUIT

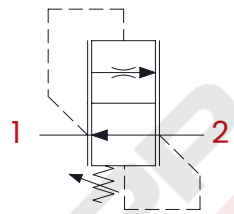

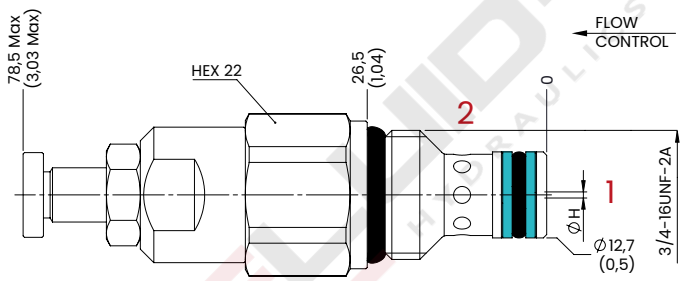

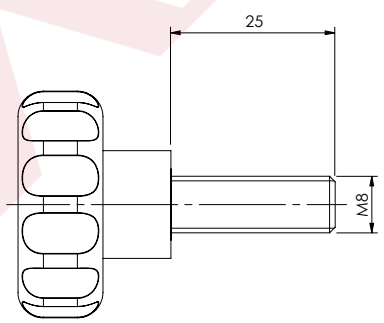

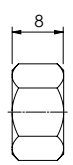

HANDKNOB CODE

62200012

NUT CODE

63300025

M8

mm [Inches]

PERFORMANCES

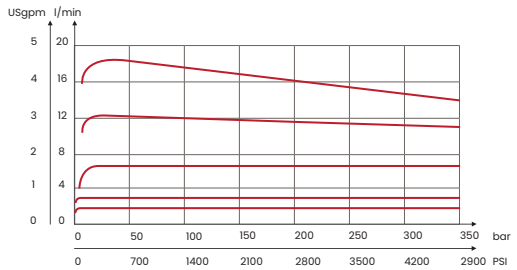

ORDERING CODE

CODE	TYPE	CAVITY	MAX FLOW CONTROLLED FLOW AT 100 bar ± 10% l/min [USgpm]	Ø H mm [Inches]	MAX PRESSURE bar [PSI]	TIGHTENING TORQUE Nm [lbt ft]	WEIGHT kg [lb]
FA7028	DR2C1	SAE8/2 3/4-16UNF-2B See cavity paragraph p. 222	0,6-2,2 [0,16-0,58]	0,9 [0,03]	350 [5075]	30 [22]	0,12 [0,26]
FA7029	DR2C2		0,8-3 [0,21-0,79]	1 [0,04]			
FA7030	DR2C3		1,3-5,1 [0,34-1,35]	1,3 [0,05]			
FA7031	DR2C4		1,9-6,8 [0,5-1,8]	1,5 [0,06]			
FA7032	DR2C5		2,6-9,1 [0,69-2,4]	1,7 [0,07]			
FA7033	DR2C6		4-14,4 [1,06-3,08]	2,2 [0,09]			
FA7034	DR2C7		7,2-24 [1,9-6,34]	2,8 [0,11]			
FA7066	DR2C8		10-35 [2,64-9,25]	3,5 [0,14]			

UPDATE. Feb. 2024 (v.06)

Mineral oil: DIN 51524 ISO 6743/4 | Oil viscosity: 15 to 250 cSt 15-250 mm2/s | Oil temperature: -4°F + 176°F -20°C +80°C | Ambient temperature: -4°F + 122°F -20°C +50°C | Max contamination index with filter: 5 to 250 cSt 15-250 mm2/s | It is necessary a filter use to protect the valve (advised filtration 15 µm)

Via Guadiana n° 8/1, 42124 Reggio Emilia - ITALY | www.fluid-app.it | sales@fluid-app.it

VP2 *SAE 8/2 - 30 l/min - 350 bar*

PNEUMATIC OPERATED VALVES

2-way/2-position pneumatic control valve, made in SAE8/2 cavity with pilot pressure 4/15 bar.

HYDRAULIC CIRCUIT

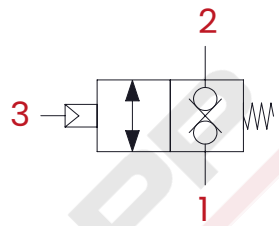

PERFORMANCES

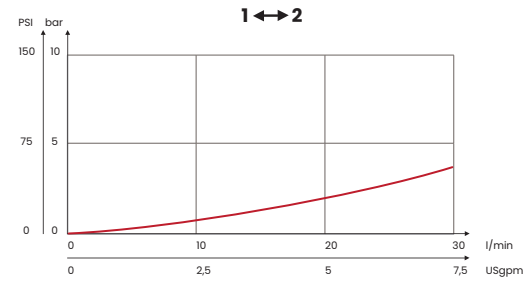

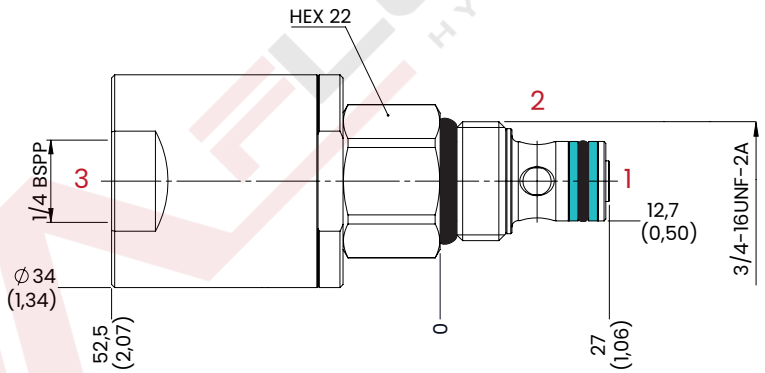

mm [Inches]

ORDERING CODE

CODE	TYPE	CAVITY	MAX FLOW **l/min** [USgpm]	MAX PRESSURE **bar** [PSI]	TIGHTENING TORQUE **Nm** [lbt ft]	PILOT PRESSURE **bar** [PSI]	WEIGHT **kg** [lb]
FA7035	**VP2**	**SAE8/2 3/4-16UN-F-2B** See cavity paragraph p. 222	30 [7,9]	350 [5075]	30 [22]	4/15 [58/218]	0,16 [0,35]

Mineral oil: DIN 51524 ISO 6743/4 | Oil viscosity: 15 to 250 cSt 15-250 mm2/s | Oil temperature: -4°F + 176°F -20°C +80°C | Ambient temperature: -4°F + 122°F -20°C +50°C | Max contamination index with filter: 5 to 250 cSt 15-250 mm2/s | It is necessary a filter use to protect the valve (advised filtration 15 µm) | Max leakage: 0,25 cm3/min - 5 drops/min at 80% of the calibration pressure

Via Guadiana n° 8/1, 42124 Reggio Emilia - ITALY | www.fluid-app.it | sales@fluid-app.it

VBC *M22 X, 1,5 - 50 l/min - 350 bar*

SINGLE ACTING PILOT CHECK VALVES

VBC check valves are used to lock a single acting actuator in position, ensuring the blocking of the load.

HYDRAULIC CIRCUIT

PERFORMANCES

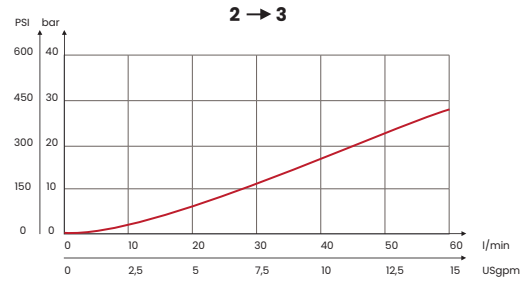

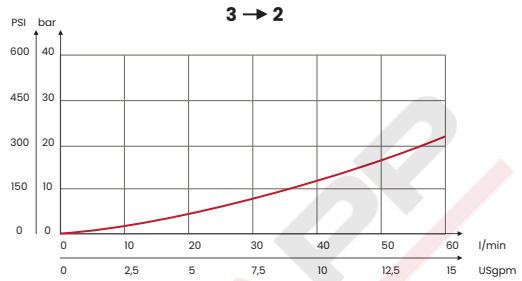

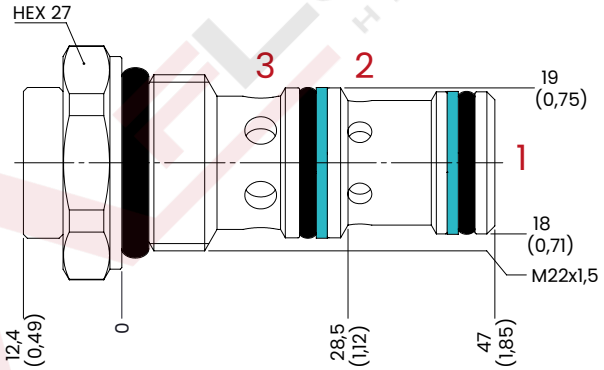

mm [Inches]

ORDERING CODE

CODE	TYPE	CAVITY	MAX FLOW **l/min** [USgpm]	MAX PRESSURE **bar** [PSI]	CRACKING PRESSURE STANDARD **bar** [PSI]	TIGHTENING TORQUE **Nm** [lbt ft]	PILOT RATIO	WEIGHT **kg** [lb]
FA7036	**VBC2250**	**FC004 M22X1,5** See cavity paragraph p. 228	50 [13,3]	350 [5075]	5 [72]	40 [30]	1:2,5	0,12 [0,26]

Mineral oil: DIN 51524 ISO 6743/4 | Oil viscosity: 15 to 250 cSt 15-250 mm2/s | Oil temperature: -4°F + 176°F -20°C +80°C | Ambient temperature: -4°F + 122°F -20°C +50°C | Max contamination index with filter: 5 to 250 cSt 15-250 mm2/s | It is necessary a filter use to protect the valve (advised filtration 15 µm)

Via Guadiana n° 8/1, 42124 Reggio Emilia - ITALY | www.fluid-app.it | sales@fluid-app.it

VDF3 *SAE10/4 - 40 l/min - 350 bar*

FLOW DIVIDERS

The flow divider/combiner valves guarantee the division of the flow into two equal parts or the reunification in the opposite direction.

HYDRAULIC CIRCUIT

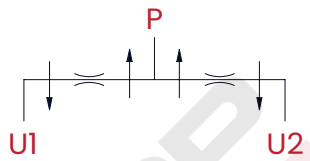

PERFORMANCES

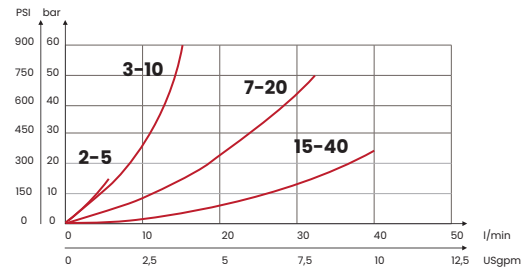

Specifications
Maximum division error: ±10% of the oil flow in U1 or U2 and 120 bar [1750 PSI] pressure difference between U1 and U2.
(Division rate 50%÷50%)

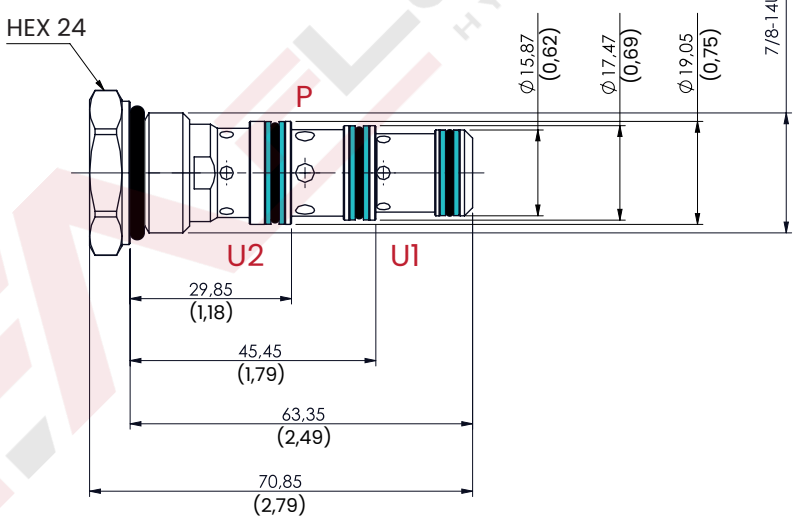

mm [Inches]

ORDERING CODE

CODE	TYPE	CAVITY	INLET FLOW RANGE **l/min** [USgpm]	MAX FLOW **l/min** [USgpm]	MAX PRESSURE **bar** [PSI]	TIGHTENING TORQUE **Nm** [lbt ft]	WEIGHT **kg** [lb]
FA7037	VDF3S1	SAE10/4 7/8-14UNF-2B See cavity paragraph p. 224	2-5 [0,5-1,3]	40 [10,6]	350 [5075]	35 [26]	0,12 [0,26]
FA7038	VDF3S2		3-10 [0,8-2,6]				
FA7039	VDF3S3		7-20 [1,8-5,2]				
FA7040	VDF3S4		15-40 [3,9-10,4]				

UPDATE. March 2023 (v.03)

Mineral oil: DIN 51524 ISO 6743/4 | Oil viscosity: 15 to 250 cSt 15-250 mm2/s | Oil temperature: -4°F + 176°F -20°C +80°C | Ambient temperature: -4°F + 122°F -20°C +50°C | Max contamination index with filter: 5 to 250 cSt 15-250 mm2/s | It is necessary a filter use to protect the valve (advised filtration 15 µm) | Max leakage: 0,25 cm3/min - 5 drops/min

Via Guadiana n° 8/1, 42124 Reggio Emilia - ITALY | www.fluid-app.it | sales@fluid-app.it

E2F28 *SAE8/2 - 22 l/min - 250 bar*

SOLENOID VALVE 2 WAYS 2 POSITIONS - POPPET DIRECT OPERATED

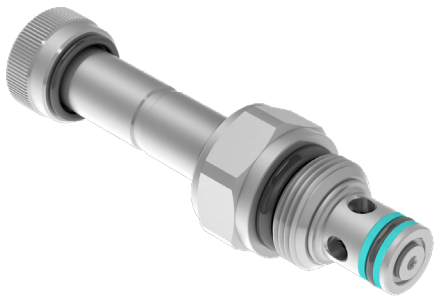

HYDRAULIC CIRCUIT

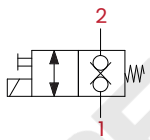

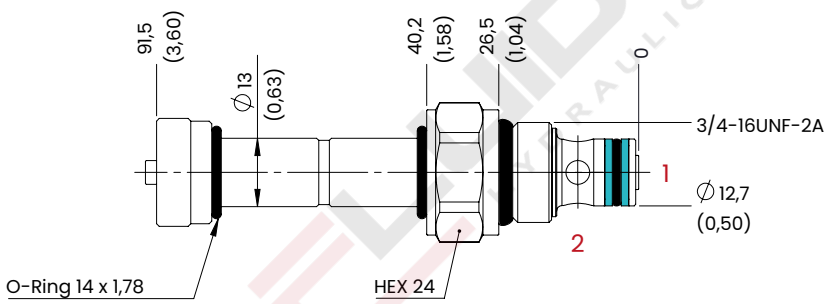

Emergency E
Push in

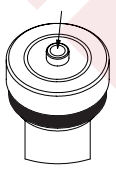

Emergency S
Screw in

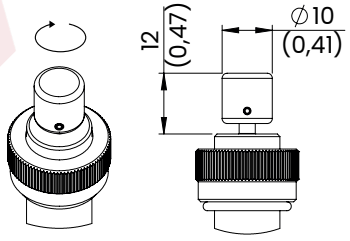

Emergency P
Push in

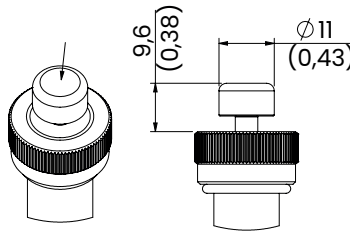

mm [Inches]

PERFORMANCES

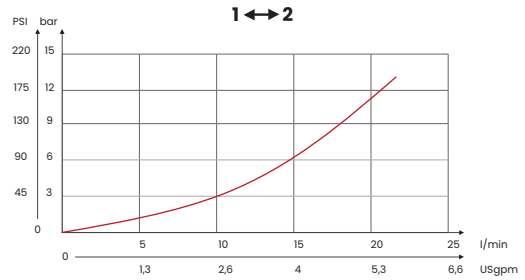

Tests carried out with solenoids at their working temperature, with a supply voltage 10% below the nominal value.

ELECTRIC

mm [Inches]

TYPE VOLTAGE	INSULATION INDEX	NOMINAL VOLTAGE	POWER AT 20C°	POWER AT 20C°	COIL CODE
DC	H	+/- 10%	22W	100% with temperature -20 C° + 40 C°	C22
*For temperature or special conditions contact our sales department					

ORDERING CODE

CODE	TYPE	VERSIONS	CAVITY	MAX FLOW **l/min** [USgpm]	MAX PRESSURE **bar** [PSI]	CH 24 TIGHTENING TORQUE **Nm** [lbt ft]	TIGHTENING TORQUE NUT **Nm** [lbt ft]	WEIGHT **kg** [lb]
FA8001	E2F28E	Normally closed Push in "E"	SAE8/2 3/4-16UNF-2B See cavity paragraph p. 222	22 [5,8]	250 [3625]	30 [22]	2 [1,5]	0,12 [0,26]
FA8040	E2F28S	Normally closed Screw in "S"						
FA8039	E2F28P	Normally closed Push "P"						
Optional, coils C22 and connectors CNS								

UPDATE. Sept. 2024 (v.06)

Mineral oil: DIN 51524 ISO 6743/4 | Oil viscosity: 15 to 250 cSt 15-250 mm2/s | Oil temperature: -4°F + 176°F -20°C +80°C | Ambient temperature: -4°F + 122°F -20°C +50°C | Max contamination index with filter: 5 to 250 cSt 15-250 mm2/s | It is necessary a filter use to protect the valve (advised filtration 15 µm) | Max leakage: 0,25 cm3/min - 5 drops/min

Via Guadiana n° 8/1, 42124 Reggio Emilia - ITALY | www.fluid-app.it | sales@fluid-app.it

E2S20 *SAE8/2 - 40 l/min - 350 bar*

SOLENOID VALVE 2 WAYS 2 POSITIONS - POPPET PILOT OPERATED

HYDRAULIC CIRCUIT

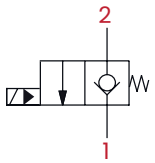

E2S20C

Normally closed

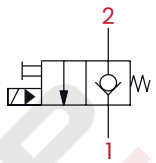

E2S20E

Normally closed with emergency

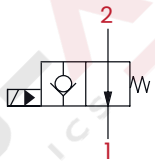

E2S20A

Normally open

PERFORMANCES

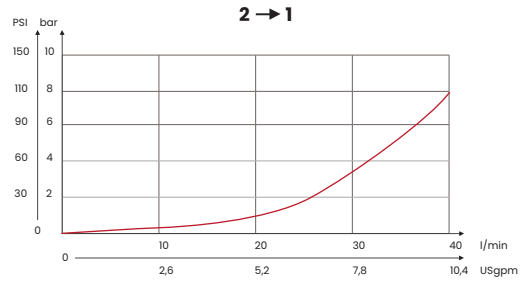

Tests carried out with solenoids at their working temperature, with a supply voltage 10% below the nominal value.

ELECTRIC

mm [Inches]

TYPE VOLTAGE	INSULATION INDEX	NOMINAL VOLTAGE	POWER AT 20C°	POWER AT 20C°	COIL CODE
DC	H	+/- 10%	22W	100% with temperature -20 C° + 40 C°	C22
*For temperature or special conditions contact our sales department					

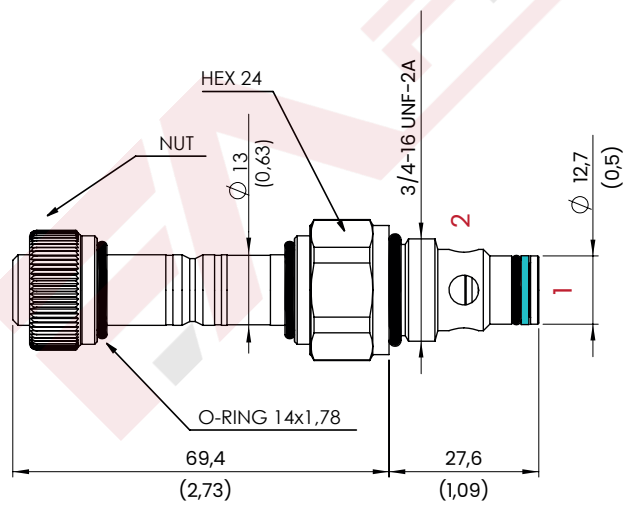

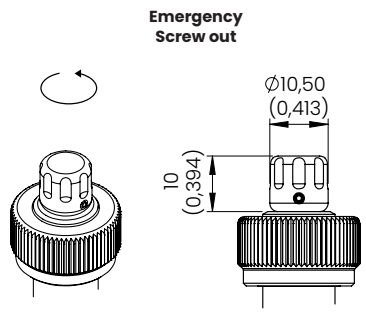

mm [Inches]

ORDERING CODE

CODE	TYPE	VERSIONS	CAVITY	MAX FLOW l/min [USgpm]	MAX PRESSURE bar [PSI]	CH 24 TIGHTENING TORQUE Nm [lbt ft]	TIGHTENING TORQUE NUT Nm [lbt ft]	WEIGHT kg [lb]
FA8002	E2S20C	Normally closed	SAE8/2 3/4-16UNF-2B See cavity paragraph p. 222	40 [10,6]	350 [5076]	30 [22]	2 [1,5]	0,16 [0,36]
FA8003	E2S20E	Normally closed + emergency						
FA8004	E2S20A	Normally open						
Optional, coils C22 and connectors CNS								

UPDATE. Sept. 2024 (v.06)

Mineral oil: DIN 51524 ISO 6743/4 | Oil viscosity: 15 to 250 cSt 15-250 mm2/s | Oil temperature: -4°F + 176°F -20°C +80°C | Ambient temperature: -4°F + 122°F -20°C +50°C | Max contamination index with filter: 5 to 250 cSt 15-250 mm2/s | It is necessary a filter use to protect the valve (advised filtration 15 µm) | Max leakage: 0,25 cm3/min - 5 drops/min

Via Guadiana n° 8/1, 42124 Reggio Emilia - ITALY | www.fluid-app.it | sales@fluid-app.it

E2L20 *SAE8/2 - 30 l/min - 300 bar*

SOLENOID VALVE 2 WAYS 2 POSITIONS - POPPET PILOT OPERATED

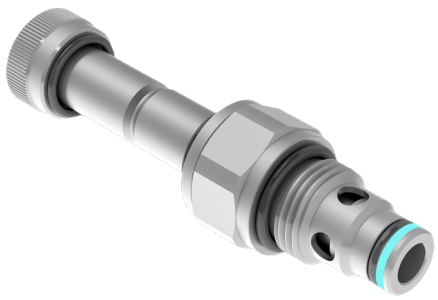

HYDRAULIC CIRCUIT

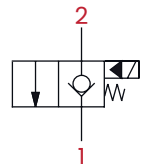

E2L20C

Normally closed

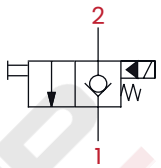

E2L20E

Normally closed with emergency

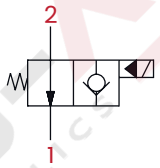

E2L20A

Normally open

PERFORMANCES

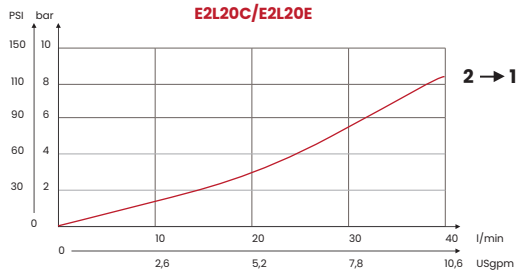

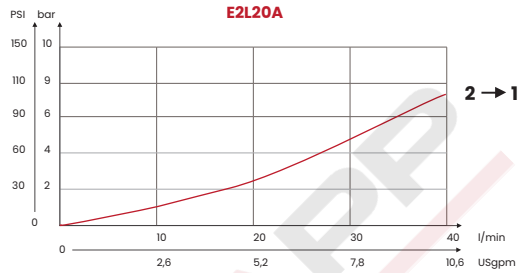

Tests carried out with solenoids at their working temperature, with a supply voltage 10% below the nominal value.

ELECTRIC

mm [Inches]

TYPE VOLTAGE	INSULATION INDEX	NOMINAL VOLTAGE	POWER AT 20C°	POWER AT 20C°	COIL CODE
DC	H	+/- 10%	22W	100% with temperature -20 C° + 40 C°	C22
*For temperature or special conditions contact our sales department					

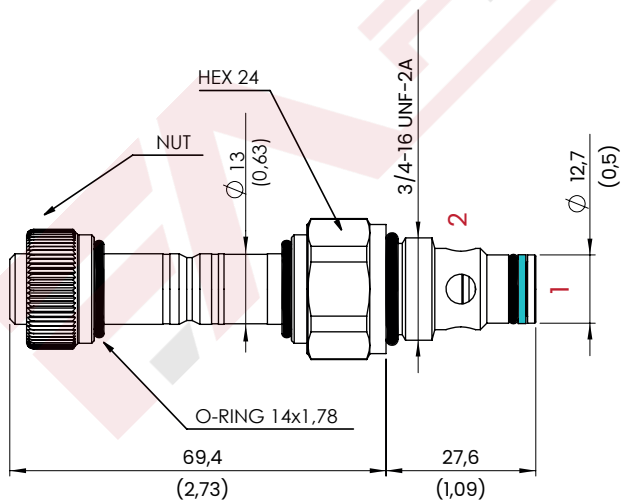

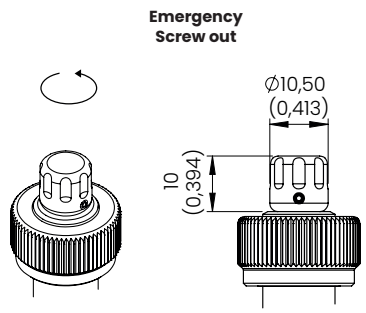

mm [Inches]

ORDERING CODE

CODE	TYPE	VERSIONS	CAVITY	MAX FLOW l/min [USgpm]	MAX PRESSURE bar [PSI]	CH 24 TIGHTENING TORQUE Nm [lbt ft]	TIGHTENING TORQUE NUT Nm [lbt ft]	WEIGHT kg [lb]
FA8005	E2L20C	Normally closed	SAE8/2 3/4-16UNF-2B See cavity paragraph p. 222	30 [7,9]	300 [4350]	30 [22]	2 [1,5]	0,12 [0,27]
FA8006	E2L20E	Normally closed + emergency						
FA8007	E2L20A	Normally open						
Optional, coils C22 and connectors CNS								

UPDATE. Sept. 2024 (v.04)

Mineral oil: DIN 51524 ISO 6743/4 | Oil viscosity: 15 to 250 cSt 15-250 mm2/s | Oil temperature: -4°F + 176°F -20°C +80°C | Ambient temperature: -4°F + 122°F -20°C +50°C | Max contamination index with filter: 5 to 250 cSt 15-250 mm2/s | It is necessary a filter use to protect the valve (advised filtration 15 µm) | Max leakage: 0,25 cm3/min - 5 drops/min

Via Guadiana n° 8/1, 42124 Reggio Emilia - ITALY | www.fluid-app.it | sales@fluid-app.it

E2S22 SAE8/2 - 40 l/min - 300 bar

SOLENOID VALVE 2 WAYS 2 POSITIONS - POPPET PILOT OPERATED

HYDRAULIC CIRCUIT

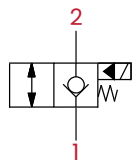

E2S22C

Normally closed

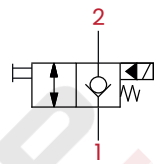

E2S22E

Normally closed with emergency

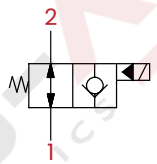

E2S22A

Normally open

PERFORMANCES

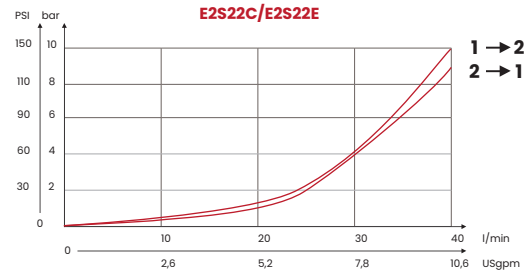

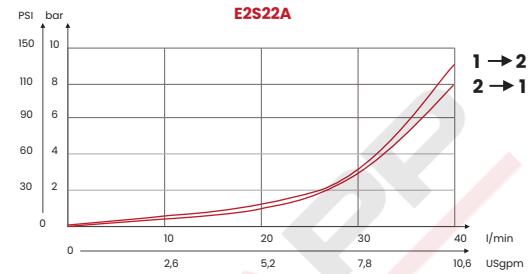

Tests carried out with solenoids at their working temperature, with a supply voltage 10% below the nominal value.

ELECTRIC

mm [Inches]

TYPE VOLTAGE	INSULATION INDEX	NOMINAL VOLTAGE	POWER AT 20C°	POWER AT 20C°	COIL CODE
DC	H	+/- 10%	22W	100% with temperature -20 C° + 40 C°	C22
*For temperature or special conditions contact our sales department					

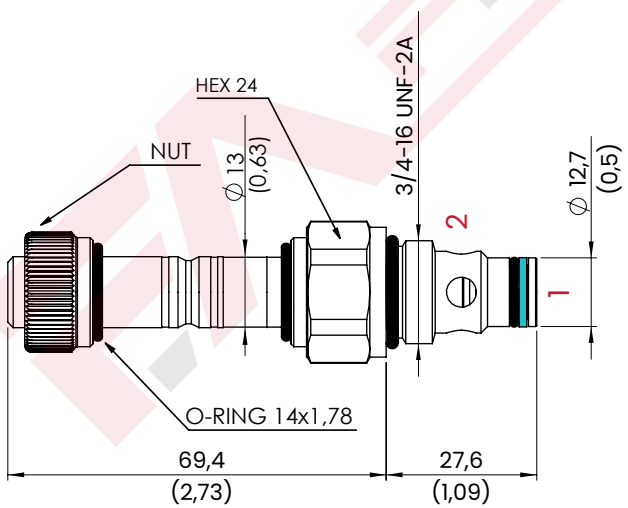

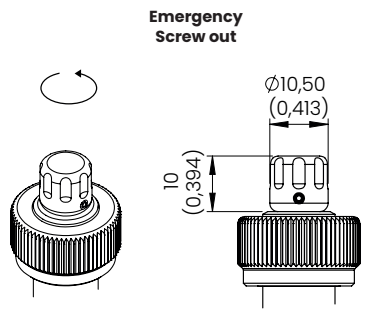

mm [Inches]

ORDERING CODE

CODE	TYPE	VERSIONS	CAVITY	MAX FLOW l/min [USgpm]	MAX PRESSURE bar [PSI]	CH 24 TIGHTENING TORQUE Nm [lbt ft]	TIGHTENING TORQUE NUT Nm [lbt ft]	WEIGHT kg [lb]
FA8008	E2S22C	Normally closed	SAE8/2 3/4-16UNF-2B See cavity paragraph p. 222	40 [10,6]	350 [5076]	30 [22]	2 [1,5]	0,16 [0,36]
FA8009	E2S22E	Normally closed + emergency						
FA8010	E2S22A	Normally open						
Optional, coils C22 and connectors CNS								

UPDATE. Sept. 2024 (v.05)

Mineral oil: DIN 51524 ISO 6743/4 | Oil viscosity: 15 to 250 cSt 15-250 mm2/s | Oil temperature: -4°F + 176°F -20°C +80°C | Ambient temperature: -4°F + 122°F -20°C +50°C | Max contamination index with filter: 5 to 250 cSt 15-250 mm2/s | It is necessary a filter use to protect the valve (advised filtration 15 µm) | Max leakage: 0,25 cm3/min - 5 drops/min

Via Guadiana n° 8/1, 42124 Reggio Emilia - ITALY | www.fluid-app.it | sales@fluid-app.it

E2S24 SAE8/2 - 40 l/min - 350 bar

SOLENOID VALVE 2 WAYS 2 POSITIONS - POPPET PILOT OPERATED

HYDRAULIC CIRCUIT

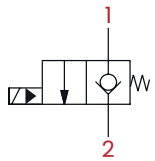

E2S24C

Normally closed

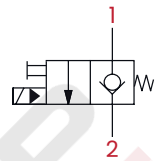

E2S24E

Normally closed with emergency

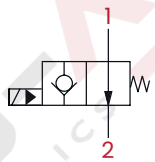

E2S24A

Normally open

PERFORMANCES

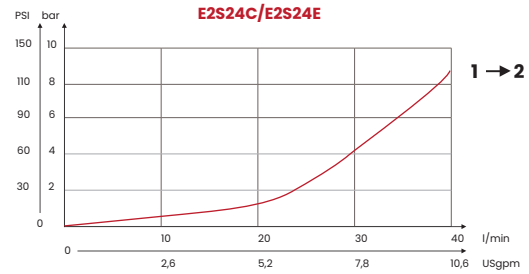

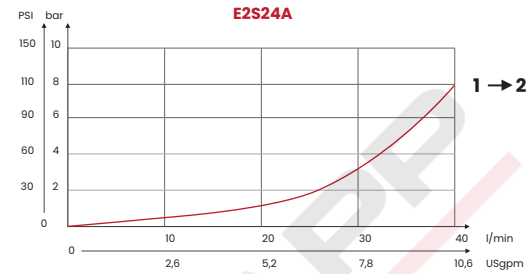

Tests carried out with solenoids at their working temperature, with a supply voltage 10% below the nominal value.

ELECTRIC

mm [Inches]

TYPE VOLTAGE	INSULATION INDEX	NOMINAL VOLTAGE	POWER AT 20C°	POWER AT 20C°	COIL CODE
DC	H	+/- 10%	22W	100% with temperature -20 C° + 40 C°	C22
*For temperature or special conditions contact our sales department					

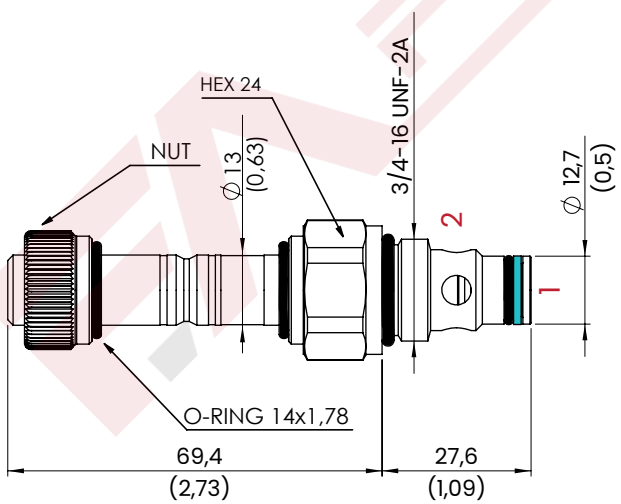

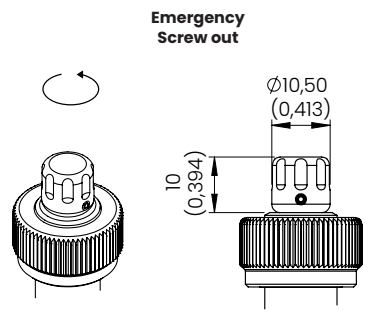

mm [Inches]

ORDERING CODE

CODE	TYPE	VERSIONS	CAVITY	MAX FLOW l/min [USgpm]	MAX PRESSURE bar [PSI]	CH 24 TIGHTENING TORQUE Nm [lbt ft]	TIGHTENING TORQUE NUT Nm [lbt ft]	WEIGHT kg [lb]
FA8011	E2S24C	Normally closed	SAE8/2 3/4-16UNF-2B See cavity paragraph p. 222	40 [10,6]	350 [5076]	30 [22]	2 [1,5]	0,16 [0,36]
FA8012	E2S24E	Normally closed + emergency						
FA8013	E2S24A	Normally open						
Optional, coils C22 and connectors CNS								

UPDATE. Sept. 2024 (v.05)

Mineral oil: DIN 51524 ISO 6743/4 | Oil viscosity: 15 to 250 cSt 15-250 mm2/s | Oil temperature: -4°F + 176°F -20°C +80°C | Ambient temperature: -4°F + 122°F -20°C +50°C | Max contamination index with filter: 5 to 250 cSt 15-250 mm2/s | It is necessary a filter use to protect the valve (advised filtration 15 µm) | Max leakage: 0,25 cm3/min - 5 drops/min

Via Guadiana n° 8/1, 42124 Reggio Emilia - ITALY | www.fluid-app.it | sales@fluid-app.it

E2S26 SAE8/2 - 40 l/min - 350 bar

SOLENOID VALVE 2 WAYS 2 POSITIONS - POPPET PILOT OPERATED

HYDRAULIC CIRCUIT

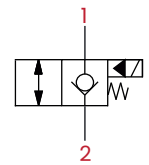

E2S26C

Normally closed

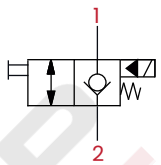

E2S26E

Normally closed with emergency

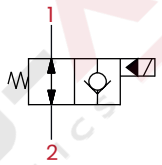

E2S26A

Normally open

PERFORMANCES

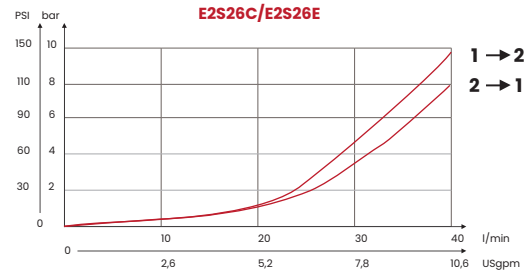

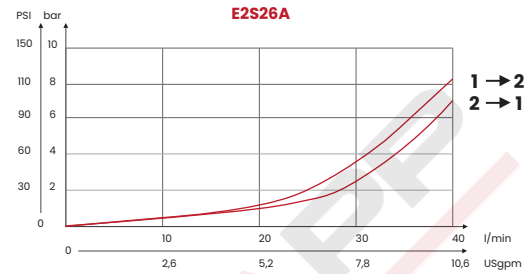

Tests carried out with solenoids at their working temperature, with a supply voltage 10% below the nominal value.

ELECTRIC

mm [Inches]

TYPE VOLTAGE	INSULATION INDEX	NOMINAL VOLTAGE	POWER AT 20C°	POWER AT 20C°	COIL CODE
DC	H	+/- 10%	22W	100% with temperature -20 C° + 40 C°	C22
*For temperature or special conditions contact our sales department					

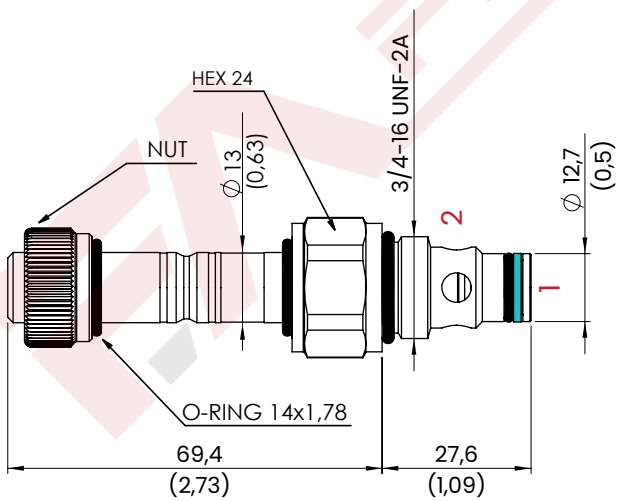

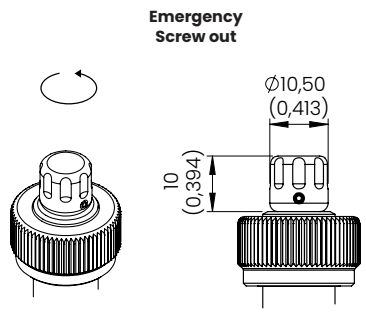

mm [Inches]

ORDERING CODE

CODE	TYPE	VERSIONS	CAVITY	MAX FLOW l/min [USgpm]	MAX PRESSURE bar [PSI]	CH 24 TIGHTENING TORQUE Nm [lbt ft]	TIGHTENING TORQUE NUT Nm [lbt ft]	WEIGHT kg [lb]
FA80014	E2S26C	Normally closed	SAE8/2 3/4-16UNF-2B See cavity paragraph p. 222	40 [10,6]	350 [5076]	30 [22]	2 [1,5]	0,16 [0,36]
FA8015	E2S26E	Normally closed + emergency						
FA8016	E2S26A	Normally open						
Optional, coils C22 and connectors CNS								

UPDATE. Sept. 2024 (v.04)

Mineral oil: DIN 51524 ISO 6743/4 | Oil viscosity: 15 to 250 cSt 15-250 mm2/s | Oil temperature: -4°F + 176°F -20°C +80°C | Ambient temperature: -4°F + 122°F -20°C +50°C | Max contamination index with filter: 5 to 250 cSt 15-250 mm2/s | It is necessary a filter use to protect the valve (advised filtration 15 µm) | Max leakage: 0,25 cm3/min - 5 drops/min

Via Guadiana n° 8/1, 42124 Reggio Emilia - ITALY | www.fluid-app.it | sales@fluid-app.it

E2S28 SAE8/2 - 40 l/min - 350 bar

SOLENOID VALVE 2 WAYS 2 POSITIONS - POPPET DIRECT OPERATED

HYDRAULIC CIRCUIT

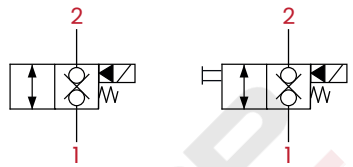

E2S28C
Normally closed

E2S28E
Normally closed with emergency

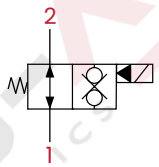

E2S28A
Normally open

PERFORMANCES

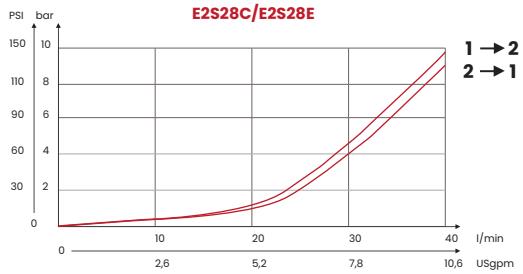

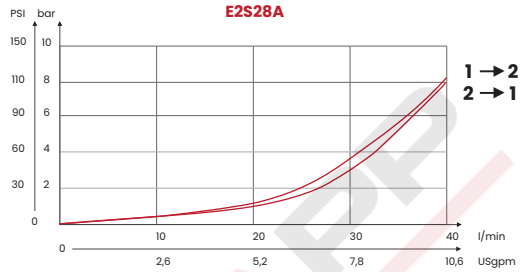

Tests carried out with solenoids at their working temperature, with a supply voltage 10% below the nominal value.

ELECTRIC

mm [Inches]

TYPE VOLTAGE	INSULATION INDEX	NOMINAL VOLTAGE	POWER AT 20C°	POWER AT 20C°	COIL CODE
DC	H	+/- 10%	22W	100% with temperature -20 C° + 40 C°	C22
*For temperature or special conditions contact our sales department					

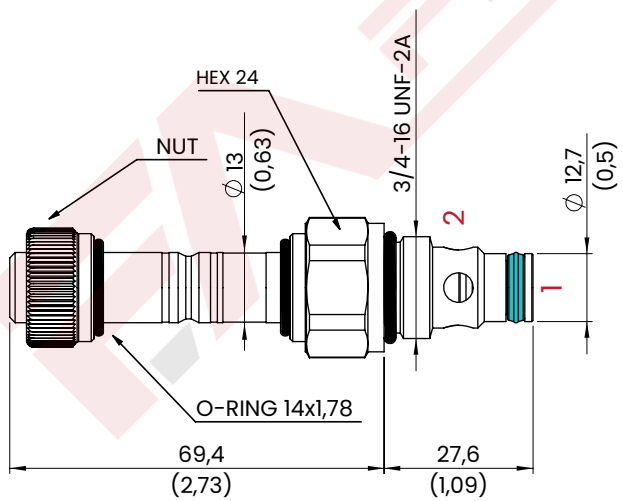

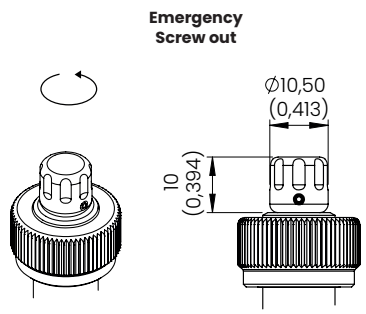

mm [Inches]

ORDERING CODE

CODE	TYPE	VERSIONS	CAVITY	MAX FLOW l/min [USgpm]	MAX PRESSURE bar [PSI]	CH 24 TIGHTENING TORQUE Nm [lbt ft]	TIGHTENING TORQUE NUT Nm [lbt ft]	WEIGHT kg [lb]
FA8017	E2S28C	Normally closed	SAE8/2 3/4-16UNF-2B See cavity paragraph p. 222	40 [10,6]	350 [5076]	30 [22]	2 [1,5]	0,16 [0,36]
FA8018	E2S28E	Normally closed + emergency						
FA8019	E2S28A	Normally open						
Optional, coils C22 and connectors CNS								

UPDATE. Sept. 2024 (v.04)

Mineral oil: DIN 51524 ISO 6743/4 | Oil viscosity: 15 to 250 cSt 15-250 mm2/s | Oil temperature: -4°F + 176°F -20°C +80°C | Ambient temperature: -4°F + 122°F -20°C +50°C | Max contamination index with filter: 5 to 250 cSt 15-250 mm2/s | It is necessary a filter use to protect the valve (advised filtration 15 µm) | Max leakage: 0,25 cm3/min - 5 drops/min

Via Guadiana n° 8/1, 42124 Reggio Emilia - ITALY | www.fluid-app.it | sales@fluid-app.it

E6S30 *SAE8/3 - 12 l/min - 210 bar*

SOLENOID VALVE 3 WAYS 2 POSITIONS - DIRECT ACTING SPOOL TYPE

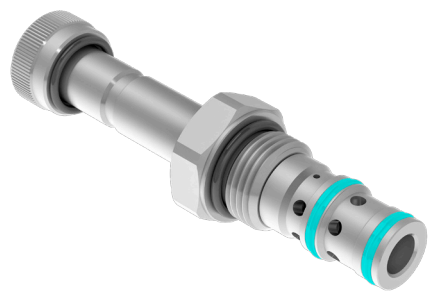

HYDRAULIC CIRCUIT

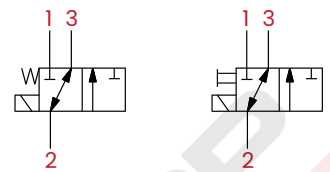

E6S30A
Standard

E6S30E
With emergency

PERFORMANCES

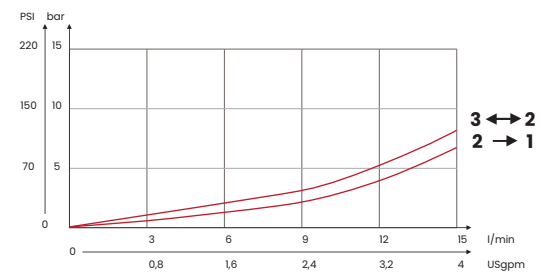

Tests carried out with solenoids at their working temperature, with a supply voltage 10% below the nominal value.

ELECTRIC

mm [Inches]

TYPE VOLTAGE	INSULATION INDEX	NOMINAL VOLTAGE	POWER AT 20C°	POWER AT 20C°	COIL CODE
DC	H	+/- 10%	22W	100% with temperature -20 C° + 40 C°	C22
*For temperature or special conditions contact our sales department					

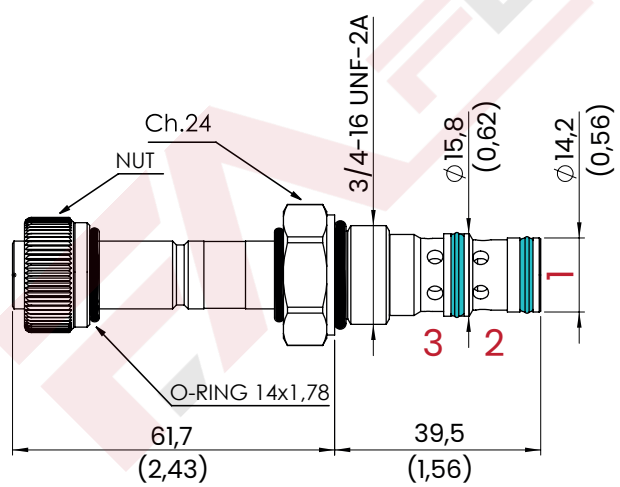

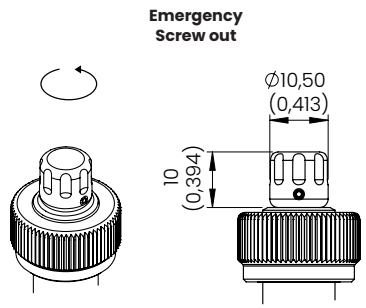

mm [Inches]

ORDERING CODE

CODE	TYPE	VERSIONS	CAVITY	MAX FLOW l/min [USgpm]	MAX PRESSURE bar [PSI]	CH 24 TIGHTENING TORQUE Nm [lbt ft]	TIGHTENING TORQUE NUT Nm [lbt ft]	WEIGHT kg [lb]
FA8020	E6S30A	Standard	SAE8/3 3/4-16UNF-2B	12 [3,2]	210 [3045]	30 [22]	2 [1,5]	0,15 [0,33]
FA8021	E6S30E	With emergency	See cavity paragraph p. 223					
Optional, coils C22 and connectors CNS								

UPDATE. Sept. 2024 (v.06)

Mineral oil: DIN 51524 ISO 6743/4 | Oil viscosity: 15 to 250 cSt 15-250 mm2/s | Oil temperature: -4°F + 176°F -20°C +80°C | Ambient temperature: -4°F + 122°F -20°C +50°C | Max contamination index with filter: 5 to 250 cSt 15-250 mm2/s | It is necessary a filter use to protect the valve (advised filtration 15 µm) | Max leakage: 60 cm3/min

Via Guadiana n° 8/1, 42124 Reggio Emilia - ITALY | www.fluid-app.it | sales@fluid-app.it

E6S31 *SAE8/3 - 12 l/min - 210 bar*

SOLENOID VALVE 3 WAYS 2 POSITIONS - DIRECT ACTING SPOOL TYPE

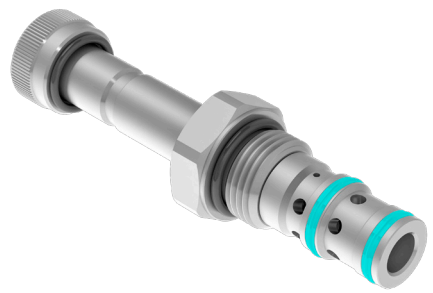

HYDRAULIC CIRCUIT

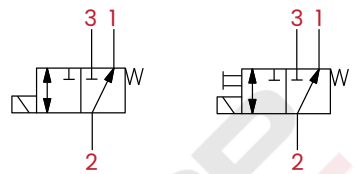

E6S31A
Standard

E6S31E
With emergency

PERFORMANCES

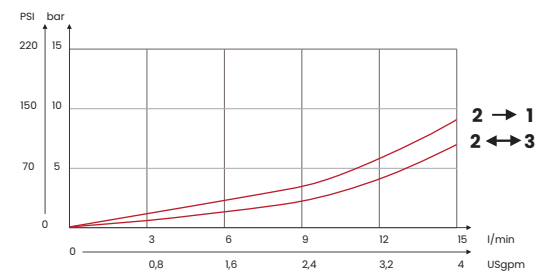

Tests carried out with solenoids at their working temperature, with a supply voltage 10% below the nominal value.

ELECTRIC

mm [Inches]

TYPE VOLTAGE	INSULATION INDEX	NOMINAL VOLTAGE	POWER AT 20C°	POWER AT 20C°	COIL CODE
DC	H	+/- 10%	22W	100% with temperature -20 C° + 40 C°	C22
*For temperature or special conditions contact our sales department					

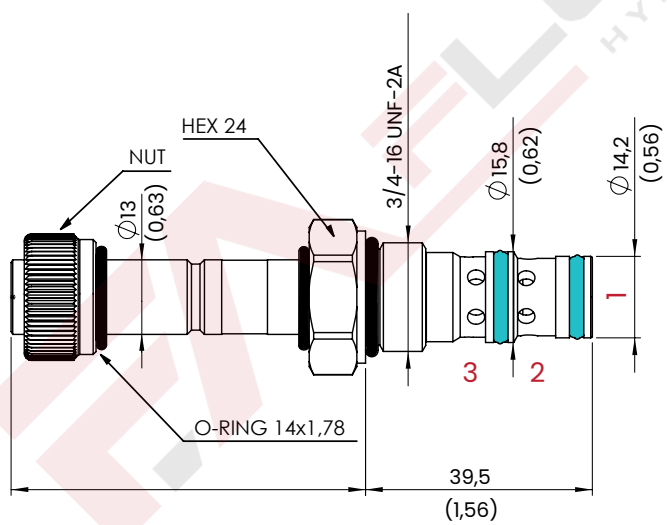

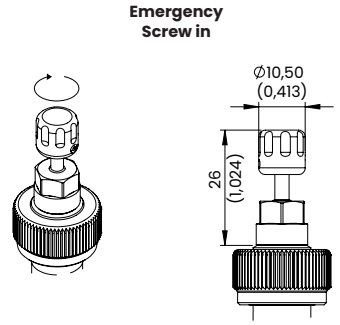

Rotating the knob clockwise the valve switches position.

mm [Inches]

ORDERING CODE

CODE	TYPE	VERSIONS	CAVITY	MAX FLOW l/min [USgpm]	MAX PRESSURE bar [PSI]	CH 24 TIGHTENING TORQUE Nm [lbt ft]	TIGHTENING TORQUE NUT Nm [lbt ft]	WEIGHT kg [lb]
FA8022	E6S31A	Standard	SAE8/3 3/4-16UNF-2B	12 [3,2]	210 [3045]	30 [22]	2 [1,5]	0,15 [0,33]
FA8023	E6S31E	With emergency	See cavity paragraph p. 223					
Optional, coils C22 and connectors CNS								

UPDATE. Sept. 2024 (v.06)

Mineral oil: DIN 51524 ISO 6743/4 | Oil viscosity: 15 to 250 cSt 15-250 mm2/s | Oil temperature: -4°F + 176°F -20°C +80°C | Ambient temperature: -4°F + 122°F -20°C +50°C | Max contamination index with filter: 5 to 250 cSt 15-250 mm2/s | It is necessary a filter use to protect the valve (advised filtration 15 µm) | Max leakage: 60 cm3/min

Via Guadiana n° 8/1, 42124 Reggio Emilia - ITALY | www.fluid-app.it | sales@fluid-app.it

E3S20 SAE10/2 - 70 l/min - 350 bar

SOLENOID VALVE 2 WAYS 2 POSITIONS - POPPET PILOT OPERATED

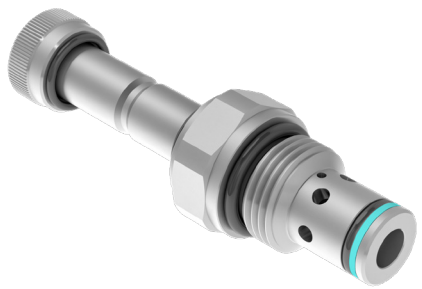

HYDRAULIC CIRCUIT

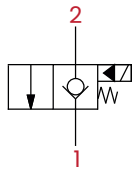

E3S20C

Normally closed

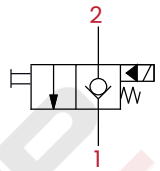

E3S20E

Normally closed with emergency

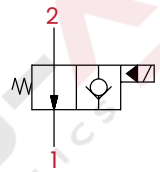

E3S20A

Normally open

PERFORMANCES

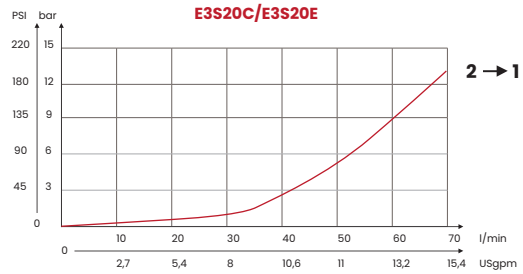

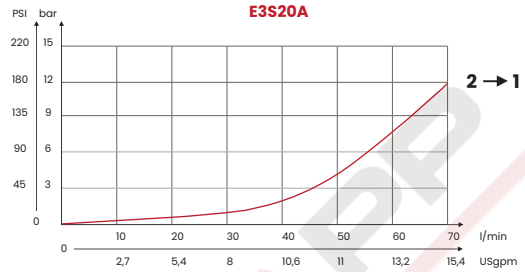

Tests carried out with solenoids at their working temperature, with a supply voltage 10% below the nominal value.

ELECTRIC

mm [Inches]

TYPE VOLTAGE	INSULATION INDEX	NOMINAL VOLTAGE	POWER AT 20C°	POWER AT 20C°	COIL CODE
DC	H	+/- 10%	22W	100% with temperature -20 C° + 40 C°	C22
*For temperature or special conditions contact our sales department					

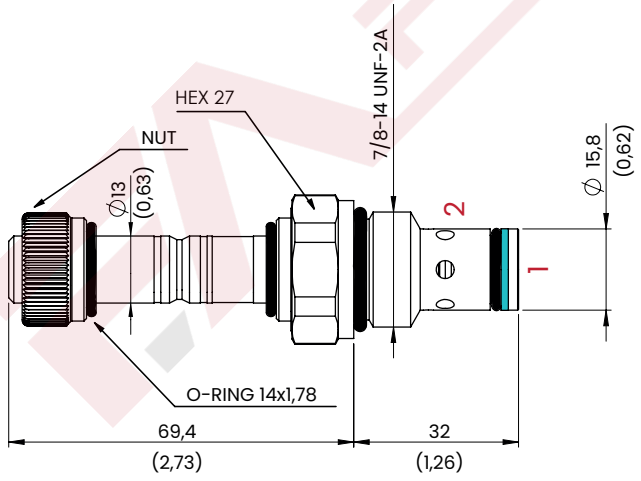

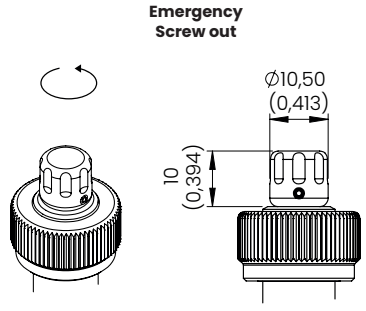

mm [Inches]

ORDERING CODE

CODE	TYPE	VERSIONS	CAVITY	MAX FLOW l/min [USgpm]	MAX PRESSURE bar [PSI]	CH 24 TIGHTENING TORQUE Nm [lbt ft]	TIGHTENING TORQUE NUT Nm [lbt ft]	WEIGHT kg [lb]
FA8024	E3S20C	Normally closed	SAE10/2 7/8-14UNF-2B See cavity paragraph p. 222	70 [18,7]	350 [5076]	40 [29,5]	2 [1,5]	0,19 [0,42]
FA8025	E3S20E	Normally closed + emergency						
FA8026	E3S20A	Normally open						
Optional, coils C22 and connectors CNS								

UPDATE. Sept. 2024 (v.04)

Mineral oil: DIN 51524 ISO 6743/4 | Oil viscosity: 15 to 250 cSt 15-250 mm2/s | Oil temperature: -4°F + 176°F -20°C +80°C | Ambient temperature: -4°F + 122°F -20°C +50°C | Max contamination index with filter: 5 to 250 cSt 15-250 mm2/s | It is necessary a filter use to protect the valve (advised filtration 15 µm) | Max leakage: 0,25 cm3/min - 5 drops/min

Via Guadiana n° 8/1, 42124 Reggio Emilia - ITALY | www.fluid-app.it | sales@fluid-app.it

E3S22 SAE10/2 - 70 l/min - 350 bar

SOLENOID VALVE 2 WAYS 2 POSITIONS - POPPET PILOT OPERATED

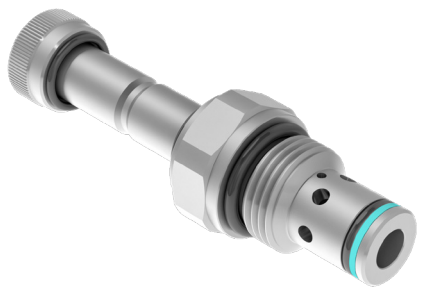

HYDRAULIC CIRCUIT

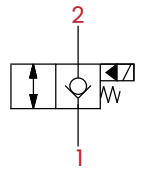

E3S22C

Normally closed

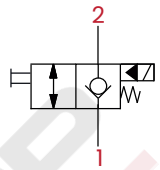

E3S22E

Normally closed with emergency

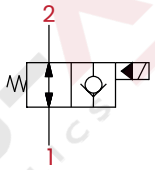

E3S22A

Normally open

PERFORMANCES

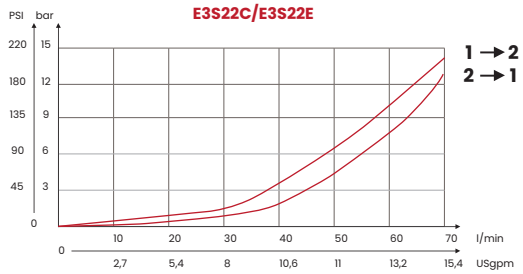

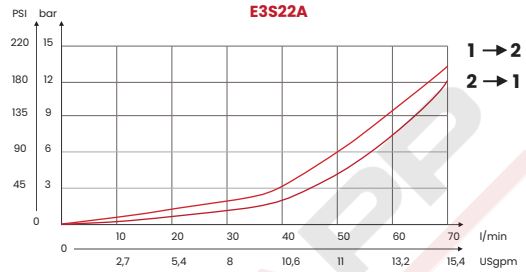

Tests carried out with solenoids at their working temperature, with a supply voltage 10% below the nominal value.

ELECTRIC

mm [Inches]

TYPE VOLTAGE	INSULATION INDEX	NOMINAL VOLTAGE	POWER AT 20C°	POWER AT 20C°	COIL CODE
DC	H	+/- 10%	22W	100% with temperature -20 C° + 40 C°	C22
*For temperature or special conditions contact our sales department					

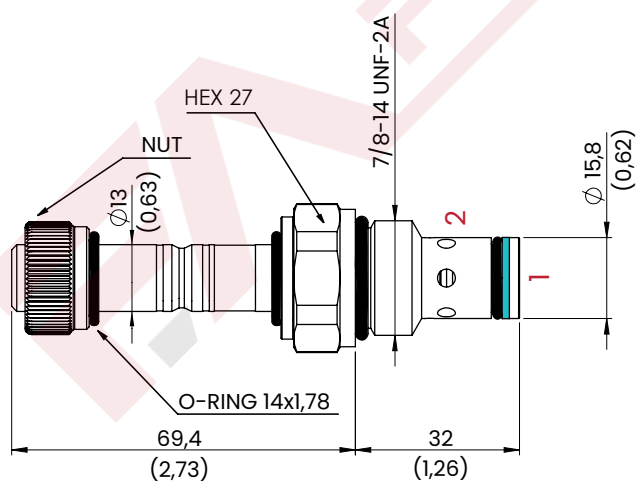

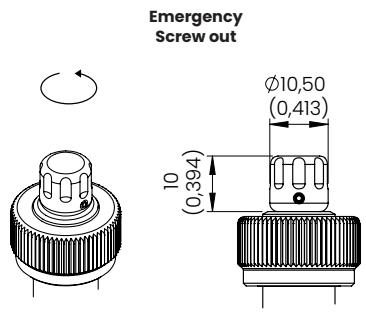

mm [Inches]

ORDERING CODE

CODE	TYPE	VERSIONS	CAVITY	MAX FLOW l/min [USgpm]	MAX PRESSURE bar [PSI]	CH 24 TIGHTENING TORQUE Nm [lbt ft]	TIGHTENING TORQUE NUT Nm [lbt ft]	WEIGHT kg [lb]
FA8027	E3S22C	Normally closed	SAE10/2 7/8-14UNF-2B See cavity paragraph p. 222	70 [18,7]	350 [5076]	40 [29,5]	2 [1,5]	0,19 [0,42]
FA8028	E3S22E	Normally closed + emergency						
FA8029	E3S22A	Normally open						
Optional, coils C22 and connectors CNS								

UPDATE. Sept. 2024 (v.04)

Mineral oil: DIN 51524 ISO 6743/4 | Oil viscosity: 15 to 250 cSt 15-250 mm2/s | Oil temperature: -4°F + 176°F -20°C +80°C | Ambient temperature: -4°F + 122°F -20°C +50°C | Max contamination index with filter: 5 to 250 cSt 15-250 mm2/s | It is necessary a filter use to protect the valve (advised filtration 15 µm) | Max leakage: 0,25 cm3/min - 5 drops/min

Via Guadiana n° 8/1, 42124 Reggio Emilia - ITALY | www.fluid-app.it | sales@fluid-app.it

E3S24 SAE10/2 - 70 l/min - 350 bar

SOLENOID VALVE 2 WAYS 2 POSITIONS - POPPET PILOT OPERATED

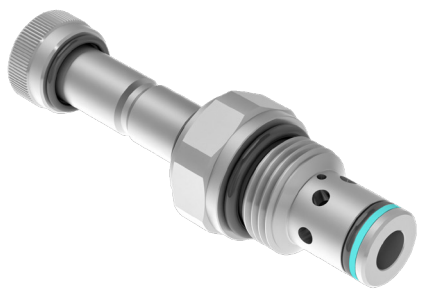

HYDRAULIC CIRCUIT

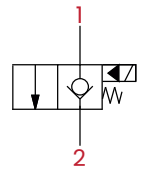

E3S24C

Normally closed

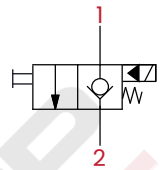

E3S24E

Normally closed with emergency

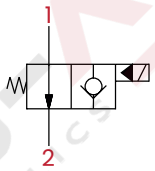

E3S24A

Normally open

PERFORMANCES

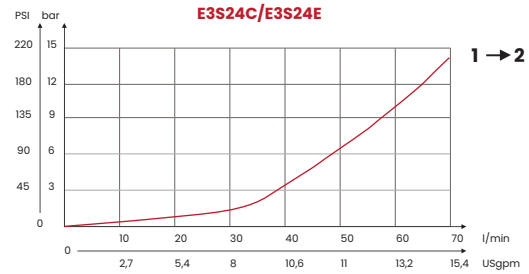

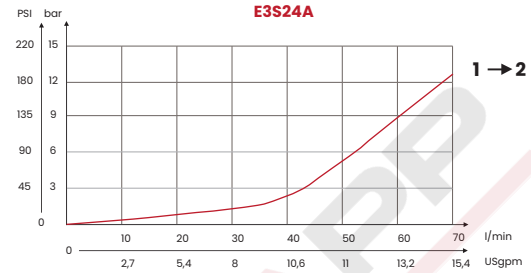

Tests carried out with solenoids at their working temperature, with a supply voltage 10% below the nominal value.

ELECTRIC

mm [Inches]

TYPE VOLTAGE	INSULATION INDEX	NOMINAL VOLTAGE	POWER AT 20C°	POWER AT 20C°	COIL CODE
DC	H	+/- 10%	22W	100% with temperature -20 C° + 40 C°	C22
*For temperature or special conditions contact our sales department					

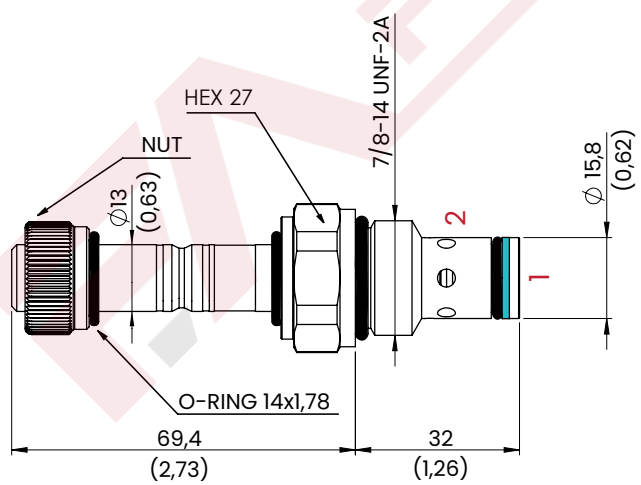

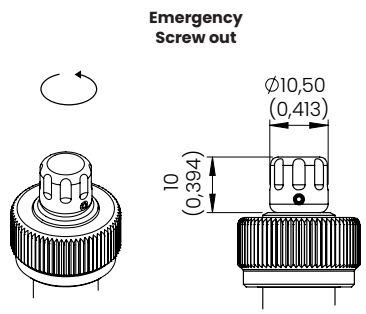

mm [Inches]

ORDERING CODE

CODE	TYPE	VERSIONS	CAVITY	MAX FLOW l/min [USgpm]	MAX PRESSURE bar [PSI]	CH 24 TIGHTENING TORQUE Nm [lbt ft]	TIGHTENING TORQUE NUT Nm [lbt ft]	WEIGHT kg [lb]
FA8030	E3S24C	Normally closed	SAE10/2 7/8-14UNF-2B See cavity paragraph p. 222	70 [18,7]	350 [5076]	40 [29,5]	2 [1,5]	0,19 [0,42]
FA8031	E3S24E	Normally closed + emergency						
FA8032	E3S24A	Normally open						
Optional, coils C22 and connectors CNS								

UPDATE. Sept. 2024 (v.04)

Mineral oil: DIN 51524 ISO 6743/4 | Oil viscosity: 15 to 250 cSt 15-250 mm2/s | Oil temperature: -4°F + 176°F -20°C +80°C | Ambient temperature: -4°F + 122°F -20°C +50°C | Max contamination index with filter: 5 to 250 cSt 15-250 mm2/s | It is necessary a filter use to protect the valve (advised filtration 15 µm) | Max leakage: 0,25 cm3/min - 5 drops/min

Via Guadiana n° 8/1, 42124 Reggio Emilia - ITALY | www.fluid-app.it | sales@fluid-app.it

E3S26 SAE10/2 - 70 l/min - 350 bar

SOLENOID VALVE 2 WAYS 2 POSITIONS - POPPET PILOT OPERATED

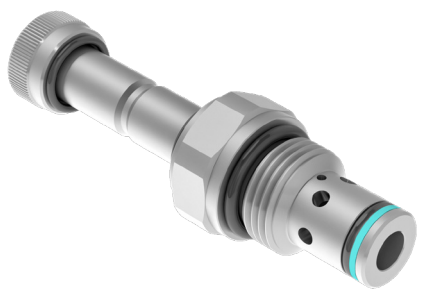

HYDRAULIC CIRCUIT

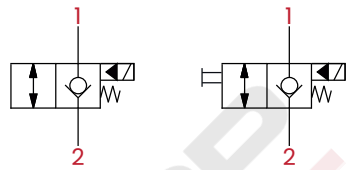

E3S26C
Normally closed

E3S26E
Normally closed with emergency

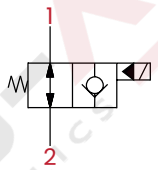

E3S26A
Normally open

PERFORMANCES

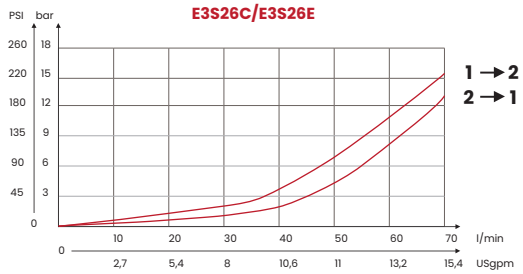

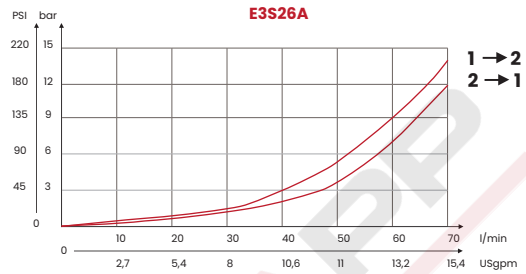

Tests carried out with solenoids at their working temperature, with a supply voltage 10% below the nominal value.

ELECTRIC

mm [Inches]

TYPE VOLTAGE	INSULATION INDEX	NOMINAL VOLTAGE	POWER AT 20C°	POWER AT 20C°	COIL CODE
DC	H	+/- 10%	22W	100% with temperature -20 C° + 40 C°	C22
*For temperature or special conditions contact our sales department					

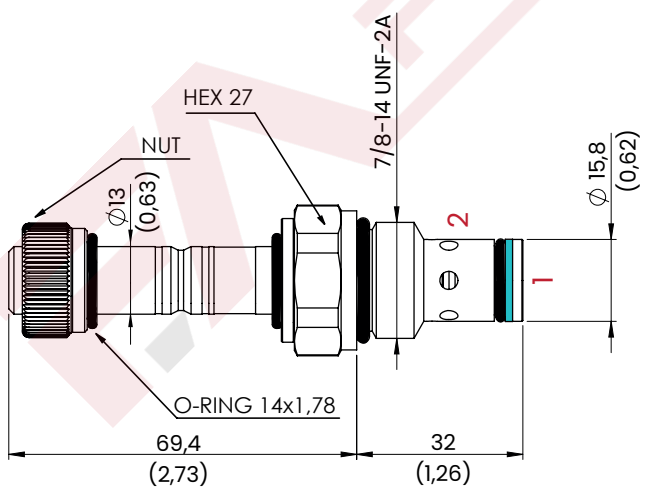

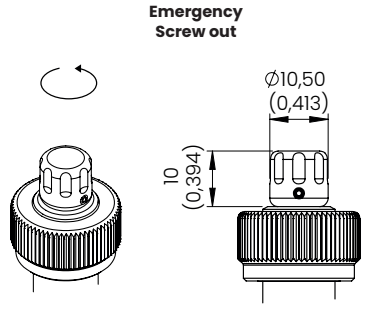

mm [Inches]

ORDERING CODE

CODE	TYPE	VERSIONS	CAVITY	MAX FLOW l/min [USgpm]	MAX PRESSURE bar [PSI]	CH 24 TIGHTENING TORQUE Nm [lbt ft]	TIGHTENING TORQUE NUT Nm [lbt ft]	WEIGHT kg [lb]
FA8033	E3S26C	Normally closed	SAE10/2 7/8-14UN-F-2B See cavity paragraph p. 222	70 [18,7]	350 [5076]	40 [29,5]	2 [1,5]	0,19 [0,42]
FA8034	E3S26E	Normally closed + emergency						
FA8035	E3S26A	Normally open						
Optional, coils C22 and connectors CNS								

UPDATE. Sept. 2024 (v.04)

Mineral oil: DIN 51524 ISO 6743/4 | Oil viscosity: 15 to 250 cSt 15-250 mm2/s | Oil temperature: -4°F + 176°F -20°C +80°C | Ambient temperature: -4°F + 122°F -20°C +50°C | Max contamination index with filter: 5 to 250 cSt 15-250 mm2/s | It is necessary a filter use to protect the valve (advised filtration 15 µm) | Max leakage: 0,25 cm3/min - 5 drops/min

Via Guadiana n° 8/1, 42124 Reggio Emilia - ITALY | www.fluid-app.it | sales@fluid-app.it

E3S28 SAE10/2 - 70 l/min - 350 bar

SOLENOID VALVE 2 WAYS 2 POSITIONS - POPPET PILOT OPERATED

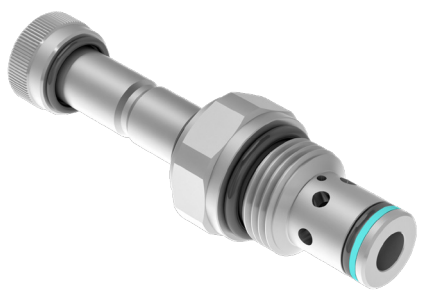

HYDRAULIC CIRCUIT

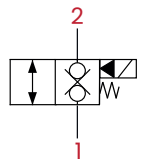

E3S28C

Normally closed

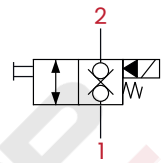

E3S28E

Normally closed with emergency

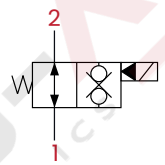

E3S28A

Normally open

PERFORMANCES

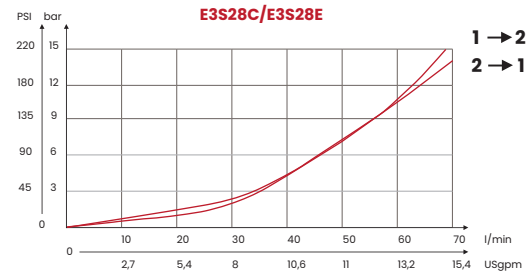

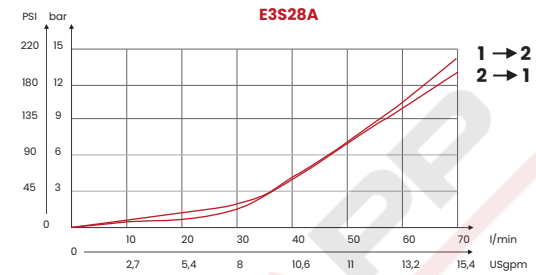

Tests carried out with solenoids at their working temperature, with a supply voltage 10% below the nominal value.

ELECTRIC

mm [Inches]

TYPE VOLTAGE	INSULATION INDEX	NOMINAL VOLTAGE	POWER AT 20C°	POWER AT 20C°	COIL CODE
DC	H	+/- 10%	22W	100% with temperature -20 C° + 40 C°	C22
*For temperature or special conditions contact our sales department					

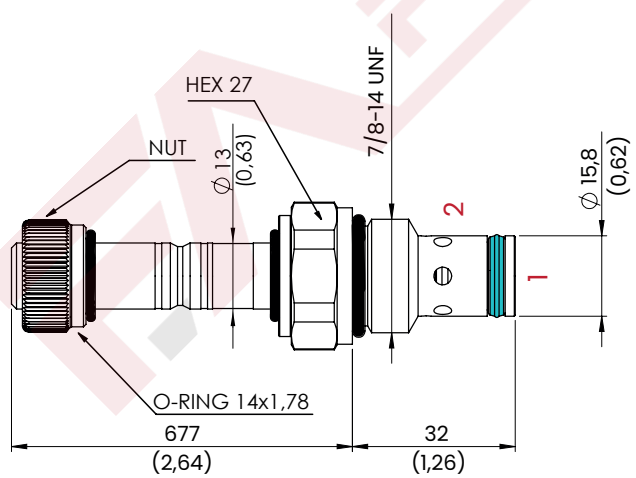

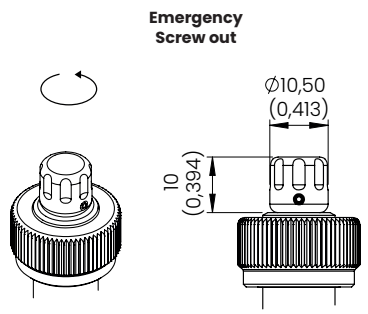

mm [Inches]

ORDERING CODE

CODE	TYPE	VERSIONS	CAVITY	MAX FLOW l/min [USgpm]	MAX PRESSURE bar [PSI]	CH 24 TIGHTENING TORQUE Nm [lbt ft]	TIGHTENING TORQUE NUT Nm [lbt ft]	WEIGHT kg [lb]
FA8036	E3S28C	Normally closed	SAE10/2 7/8-14UN-F-2B See cavity paragraph p. 222	70 [18,7]	350 [5076]	40 [29,5]	2 [1,5]	0,19 [0,42]
FA8037	E3S28E	Normally closed + emergency						
FA8038	E3S28A	Normally open						
Optional, coils C22 and connectors CNS								

UPDATE. Sept. 2024 (v.05)

Mineral oil: DIN 51524 ISO 6743/4 | Oil viscosity: 15 to 250 cSt 15-250 mm2/s | Oil temperature: -4°F + 176°F -20°C +80°C | Ambient temperature: -4°F + 122°F -20°C +50°C | Max contamination index with filter: 5 to 250 cSt 15-250 mm2/s | It is necessary a filter use to protect the valve (advised filtration 15 µm) | Max leakage: 0,25 cm3/min - 5 drops/min

Via Guadiana n° 8/1, 42124 Reggio Emilia - ITALY | www.fluid-app.it | sales@fluid-app.it

22W COILS

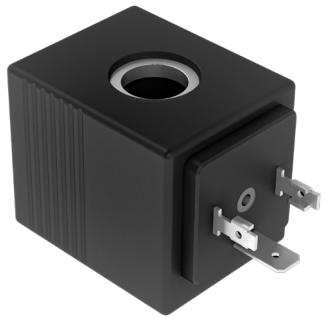

HYDRAULIC CIRCUIT

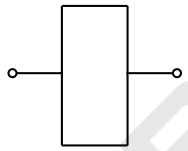

ELECTRIC

mm [Inches]

Protection class with std.connector DIN	INSULATION INDEX	Wire insulation class	NOMINAL VOLTAGE	POWER AT 20C°	ED*
IP 65	H	H	+/- 10%	22W	100% with temperature -20 C° + 40 C°
*For temperature or special conditions contact our sales department					

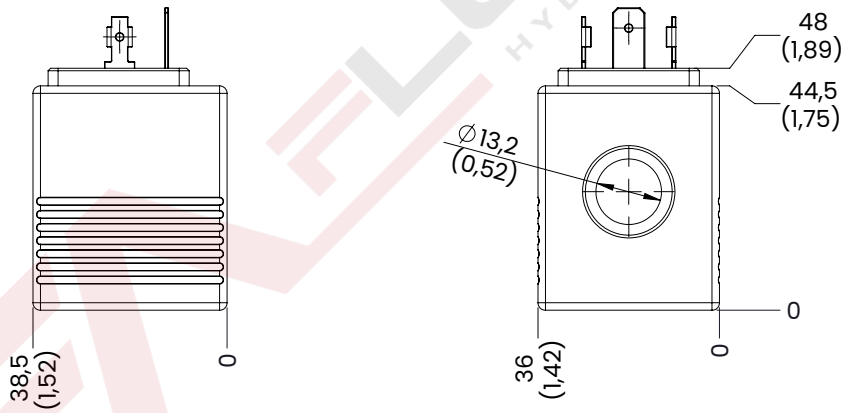

mm [Inches]

ORDERING CODE

CODE	TYPE	VOLTAGE	RESISTANCE	MATCHING CONNECTOR	ABSORBED POWER	TIGHTENING TORQUE Nm lbt ft	WEIGHT kg lbt
C2212	C2212	12Vdc	6,5 Ω	CNS [DIN 43650]	22 W	2 [1,5]	0,21 [0,46]
C2224	C2224	24Vdc	26,5 Ω				

UPDATE. March 2023 (v.04)

Via Guadiana n° 8/1, 42124 Reggio Emilia - ITALY | www.fluid-app.it | sales@fluid-app.it

ORDERING CODE

CODE	TYPE	NOMINAL CURRENT	MAX OPERATING CURRENT	CONTACT RESISTANCE	MAX CONDUCTORS CROSS-SECTION	CONTACT HOLDER	GAND SIZE OPTIONS
CNS	CNS	10 A	16 A	≤ 4m Ohm	1,5 mm^2	PA (+G)	Pg11

CABLE DIAMETER	PROTECTION CLASS	ISULATIAN CLASS	SEALING MATERIAL	OPERATING TEMPERATURE	WEIGHT kg lb
6-8 mm	IP 65 EN 60529	VDE 0110-1/89	NBR	-40° +90°	0,020 [0,044]

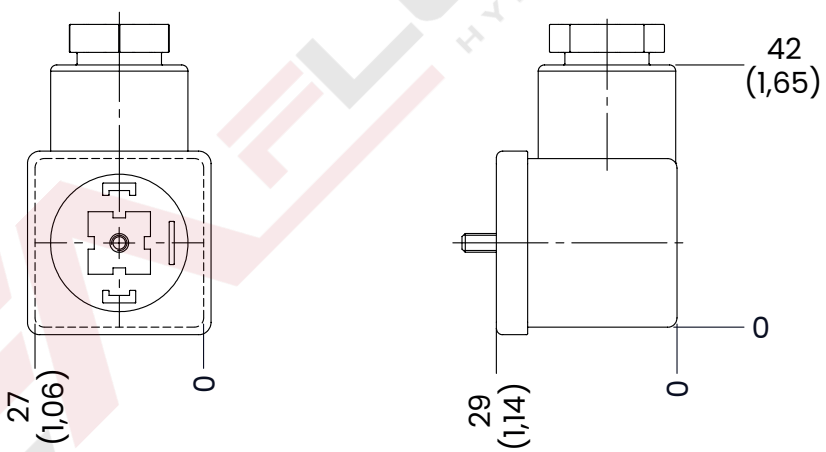

mm [Inches]

MANIFOLD SAE8/2

ORDERING CODE

CODE	F	CAVITY	MAX WORKING PRESSURE bar PSI	WEIGHT kg lb
31100042	1/4 BSPP	SAE8/2 3/4-16UNF-2B See cavity paragraph p. 222	350 [5076]	0,48 [1,06]
31100043	3/8 BSPP			0,45 [1,99]
Steel body				

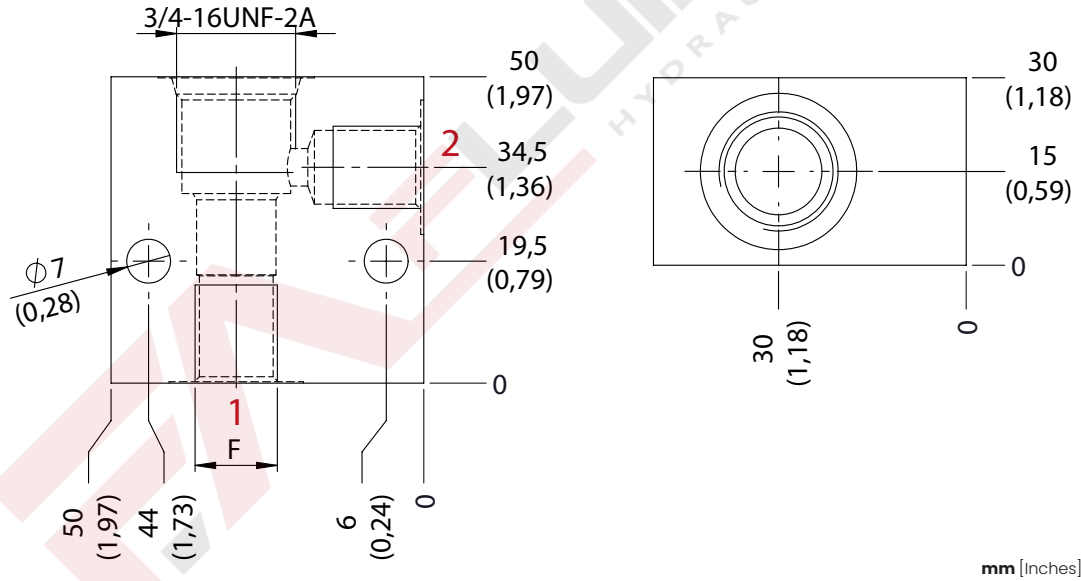

mm [Inches]

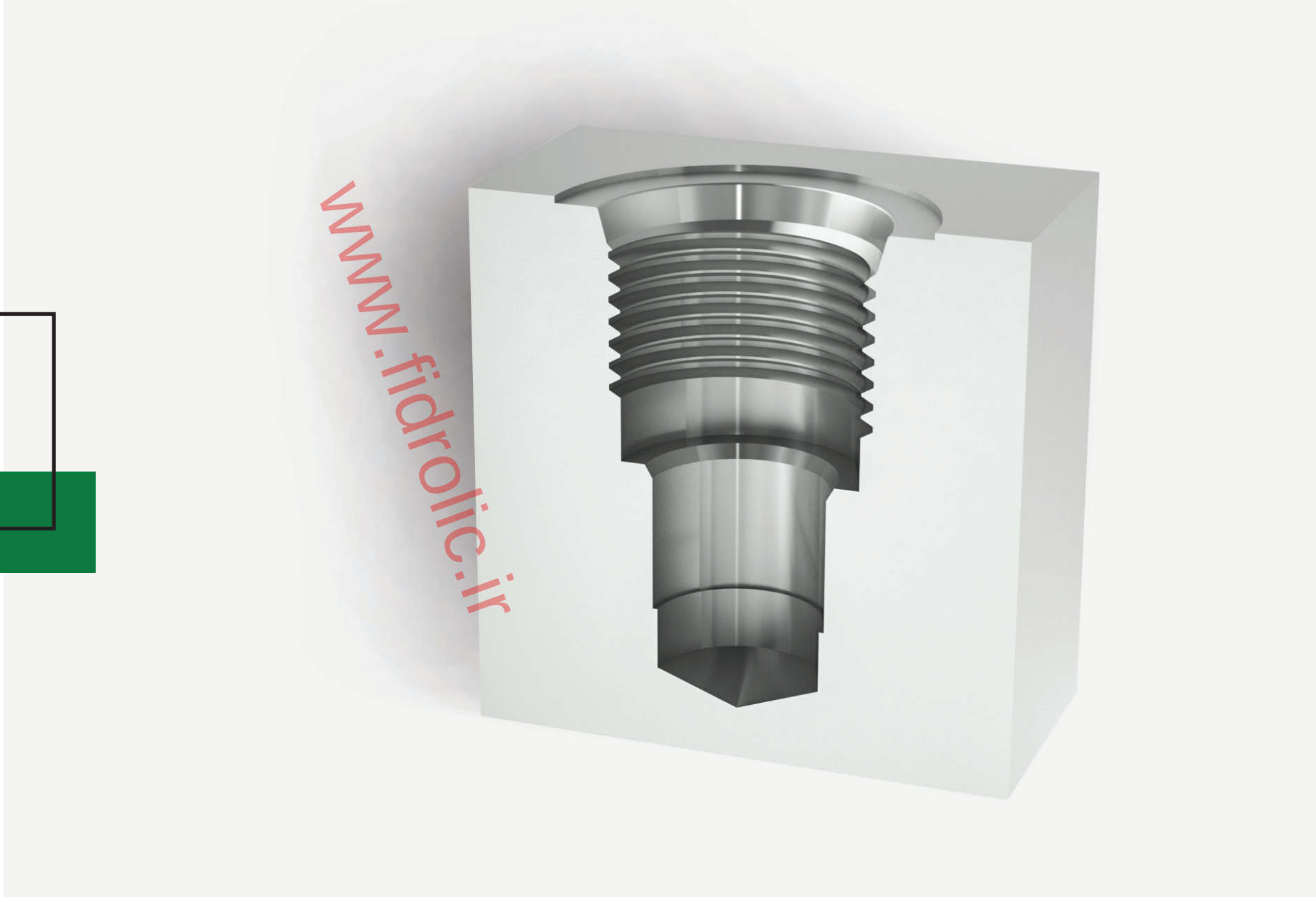
www.fidrolic.ir

CAVITY SAE/2

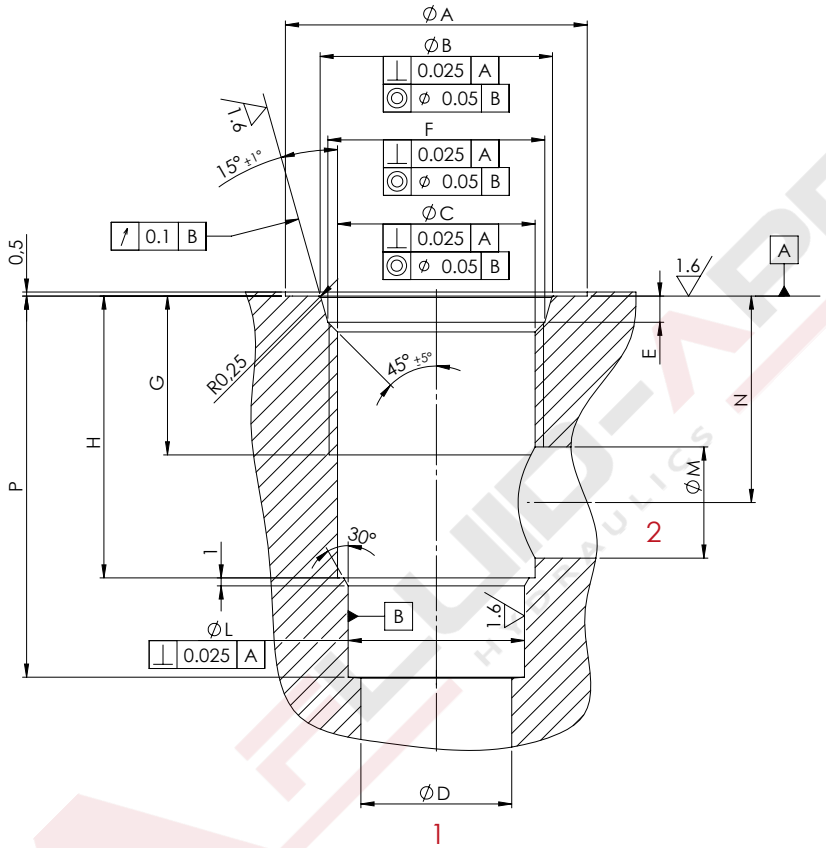

TECHNICAL CHARACTERISTICS

mm [Inches]

CAVITY CODE	F ports	Ø A + 0,5 0	Ø B ± 0,05	Ø C ± 0,05	Ø D MAX	E + 0,3 0	G	H + 0,1 0	L + 0,05 0	Ø M	N	P + 0,5 0
SAE08/2	3/4-16UNF-2B	27 [1,06]	20,66 [0,81]	17,42 [0,69]	12 [0,47]	2,5 [0,1]	13 [0,51]	18,2 [0,72]	12,7 [0,5]	8 [0,31]	14 [0,55]	29,5 [1,16]
SAE10/2	7/8-14UNF-2B	30 [1,18]	24 [0,94]	20,62 [0,81]	15 [0,59]	2,8 [0,11]	16 [0,63]	24 [0,94]	15,9 [0,6]	11 [0,43]	18 [0,71]	33,5 [1,32]
SAE12/2	1-1/16-12UN-2B	38 [1,50]	29,23 [1,15]	24,73 [0,97]	19 [0,75]	3,5 [0,14]	20 [0,79]	35 [1,38]	22,2 [0,87]	18 [0,71]	24,5 [0,96]	47 [1,85]

UPDATE. March 2023 (v.05)

SAE/3

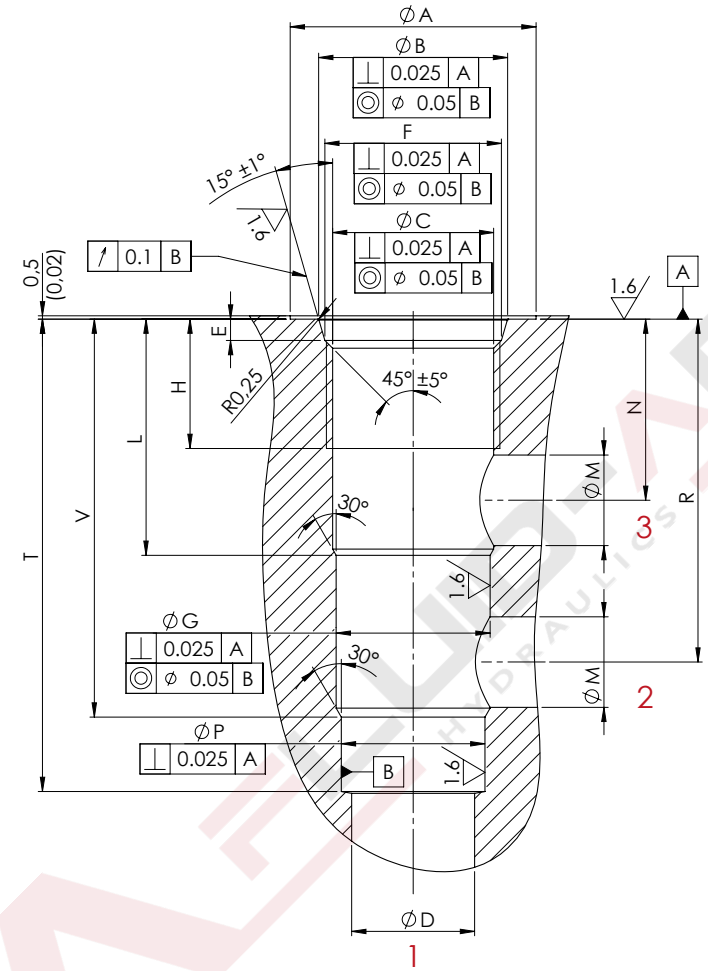

TECHNICAL CHARACTERISTICS

mm [Inches]

CAVITY CODE	F ports	Ø A + 0,5 0	Ø B ± 0,05	Ø C ± 0,05	Ø D MAX	E + 0,3 0	Ø G + 0,05 0	H	L	Ø M	N	Ø P + 0,05 0	R	T	V
SAE08/3	3/4-16UNF-2B	27 [1,06]	20,66 [0,81]	17,42 [0,69]	12,5 [0,49]	2,5 [0,1]	15,9 [0,63]	12,5 [0,49]	19,1 [0,75]	5,5 [0,22]	14,3 [0,56]	14,3 [0,56]	28,6 [1,13]	43,3 [1,7]	33,3 [1,31]
SAE10/3	7/8-14UNF-2B	30 [1,18]	24 [0,94]	20,62 [0,81]	14 [0,55]	2,8 [0,11]	17,5 [0,69]	16 [63]	23,1 [0,91]	6,5 [0,26]	18,3 [0,72]	15,9 [0,63]	34 [1,34]	47,6 [1,87]	39,6 [1,56]
SAE12/3	1-1/16-12UN-2B	38 [1,50]	29,23 [1,15]	24,73 [0,97]	19 [0,75]	3,5 [0,14]	23,8 [0,94]	19 [0,75]	36,6 [1,44]	16 [0,63]	24,5 [0,96]	22,2 [0,87]	53 [2,09]	75,4 [2,97]	63,5 [2,5]

UPDATE. August 2022 (v.03)

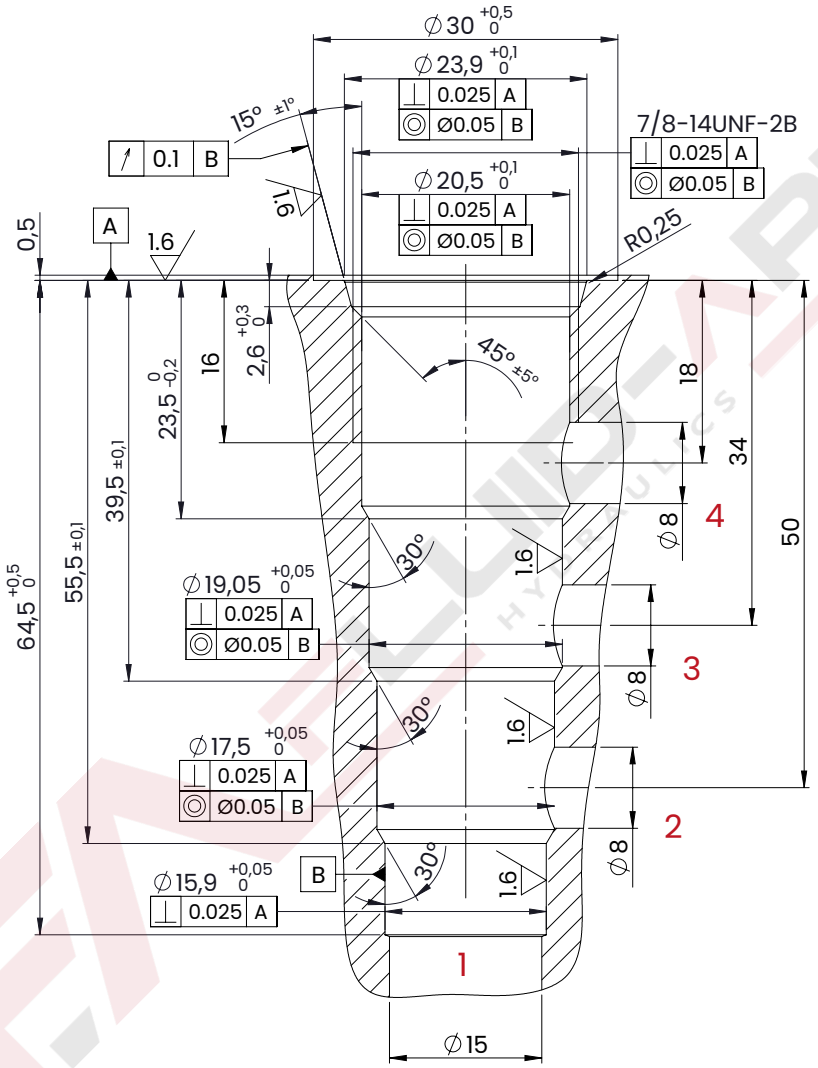

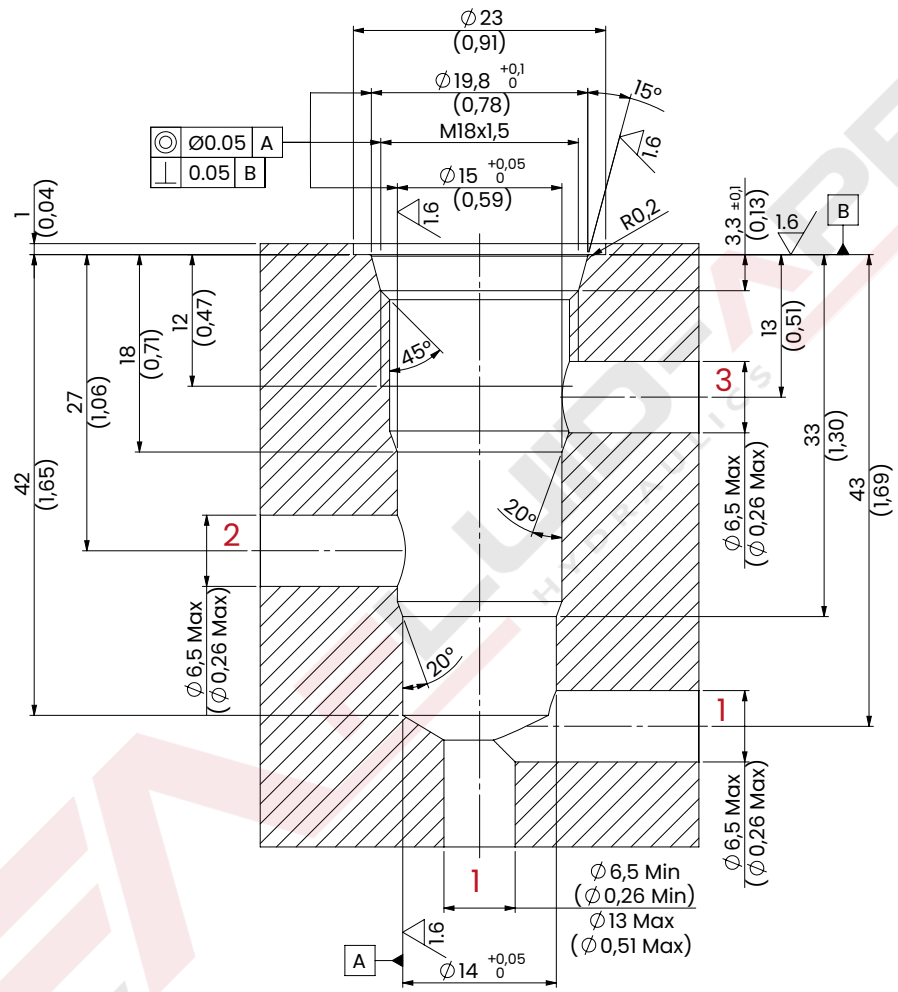

mm [Inches]

UPDATE. March 2023 (v.03)

mm [Inches]

UPDATE. February 2023 (v.03)

FC002 (M30 VALVE)

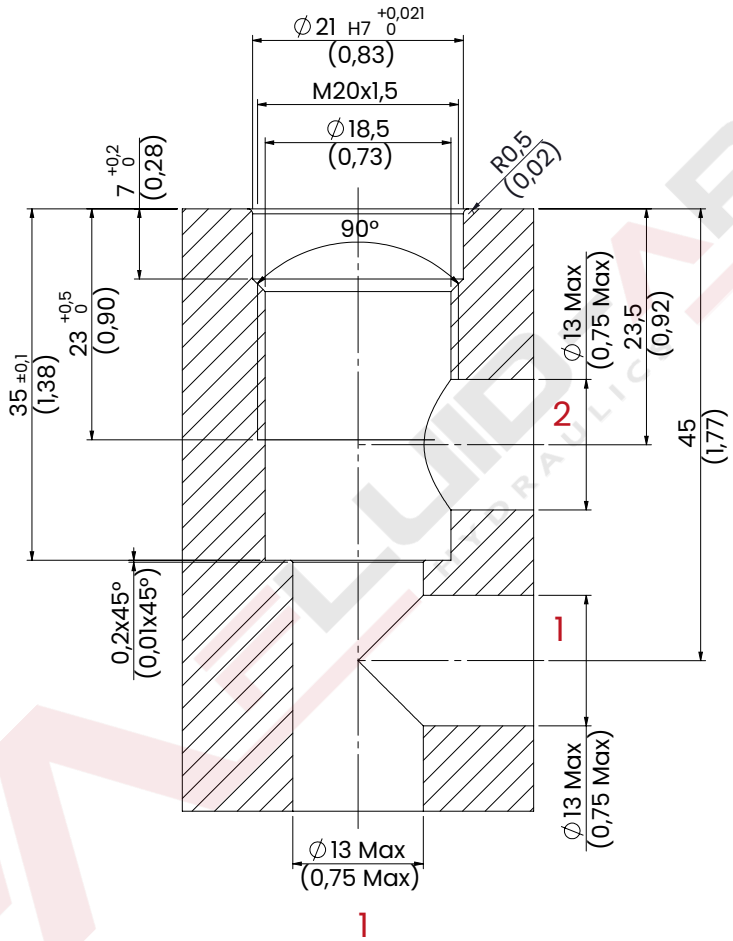

mm [Inches]

UPDATE. February 2023 (v.01)

FC003 (M40 VALVE)

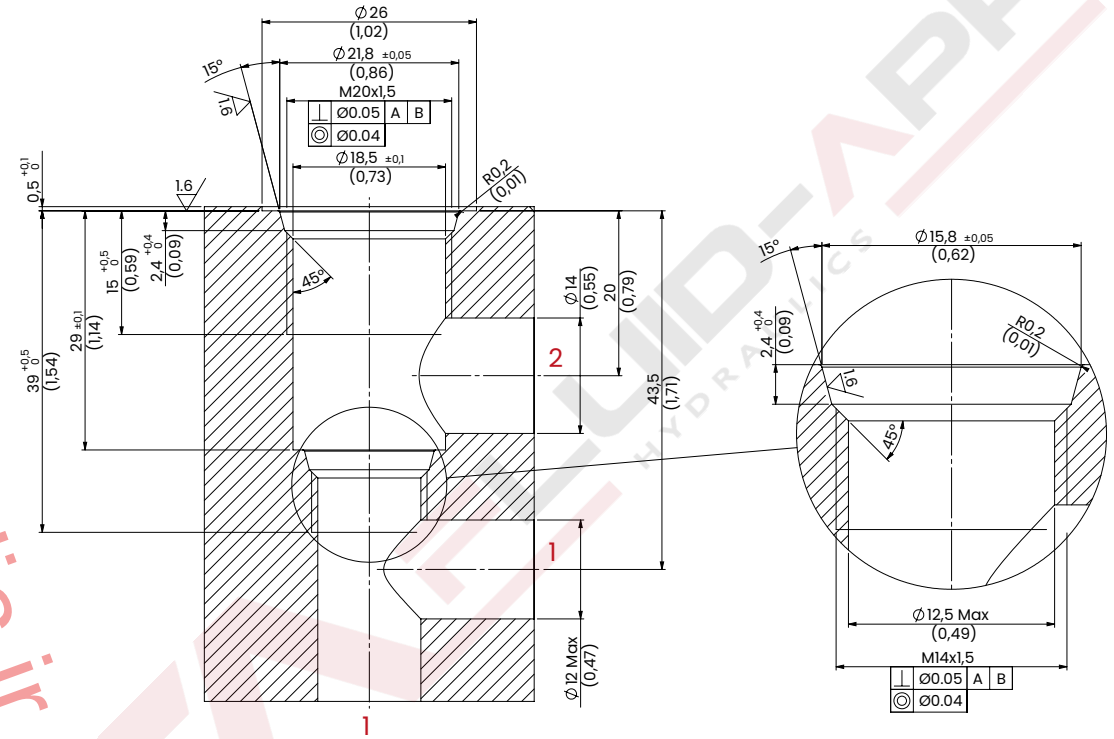

mm [Inches]

UPDATE. February 2023 (v.03)

Via Guadiana n° 8/1, 42124 Reggio Emilia - ITALY | www.fluid-app.it | sales@fluid-app.it

FC004 (VBC2250 VALVE)

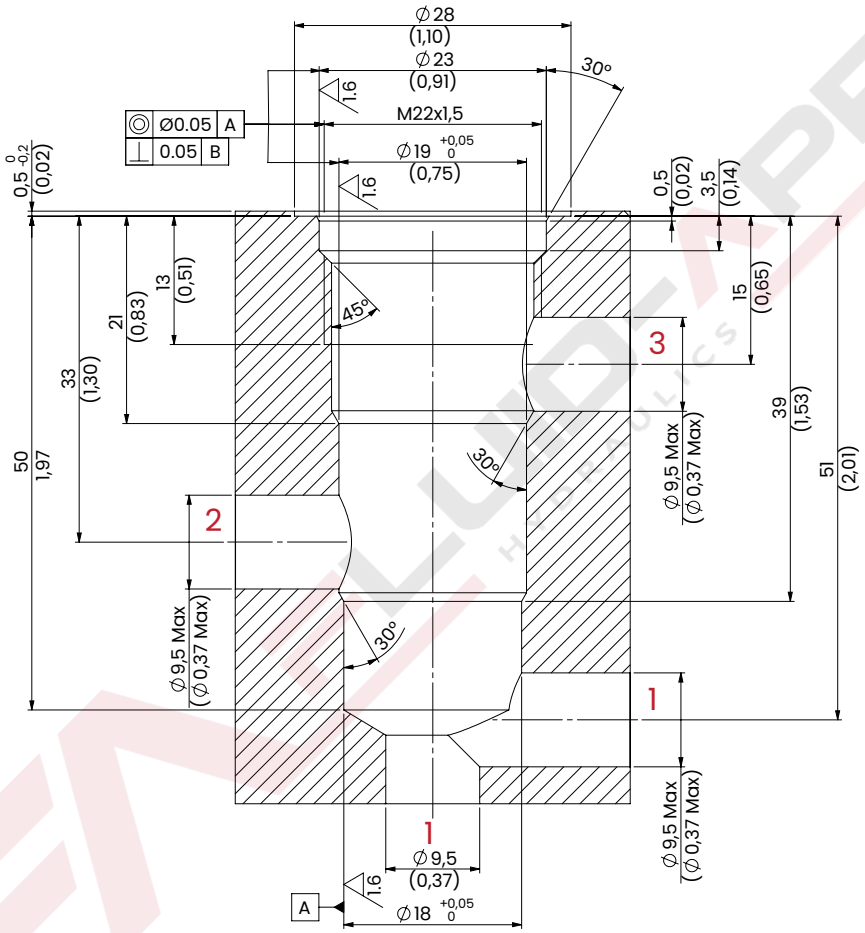

mm [Inches]

UPDATE. September 2022 (v.04)

FC005 (M80 VALVE)

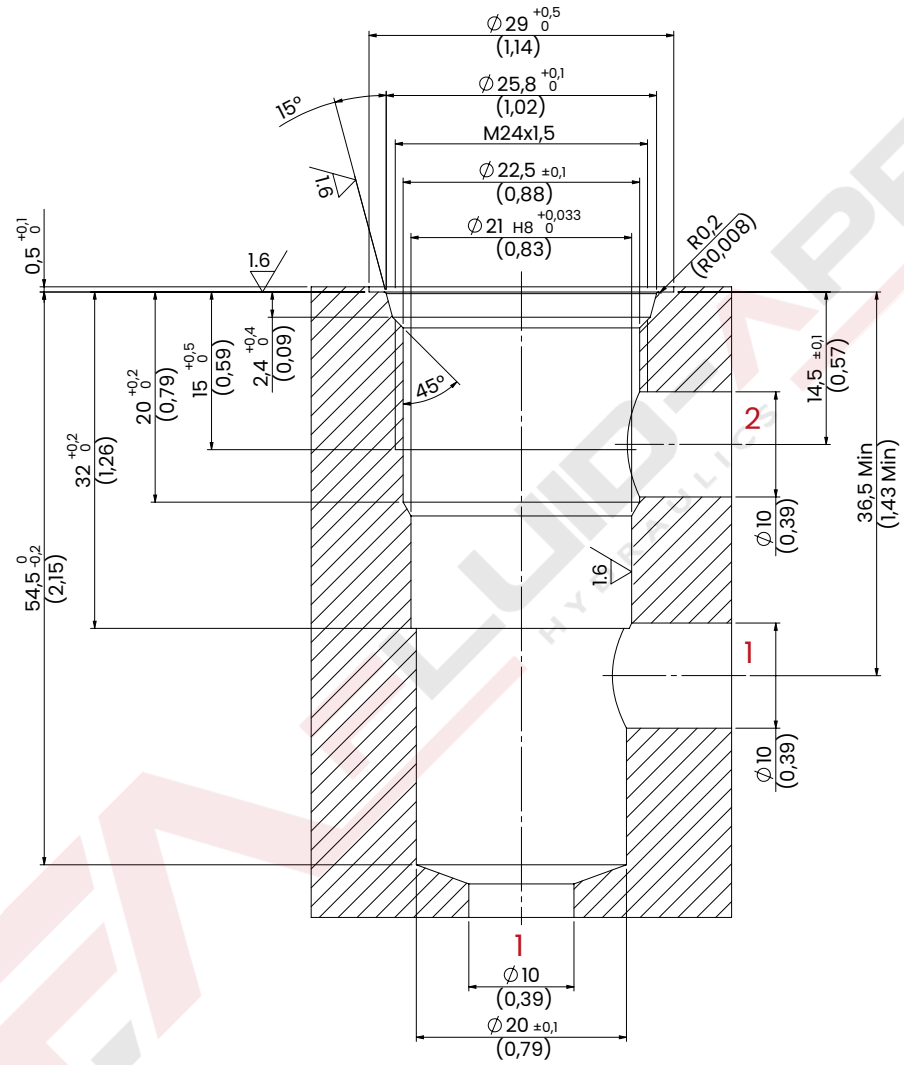

mm [Inches]

UPDATE. September 2022 (v.04)

Via Guadiana n° 8/1, 42124 Reggio Emilia - ITALY | www.fluid-app.it | sales@fluid-app.it

VBA

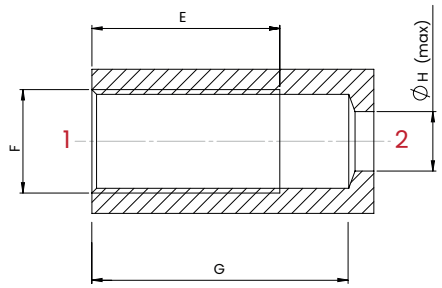

TECHNICAL CHARACTERISTICS

mm [Inches]

CAVITY CODE	VALVE CODE	TYPE	F ports	E	G	H
FC100	FA6001	VBA1B	1/4 BSPP	25[0,98]	35 [1,38]	7 [0,28]
FC101	FA6002	VBA2B	3/8 BSPP	30[1,18]	41 [1,61]	9,5 [0,37]
FC102	FA6003	VBA3B	1/2 BSPP	33[1,30]	46 [1,81]	12 [0,47]
FC103	FA6004	VBA4B	3/4 BSPP	42 [1,65]	55 [2,17]	16 [0,63]
FC104	FA6005	VBA5B	1 BSPP	48 [1,89]	63 [2,48]	22 [0,86]

F1B / F1T / F1E

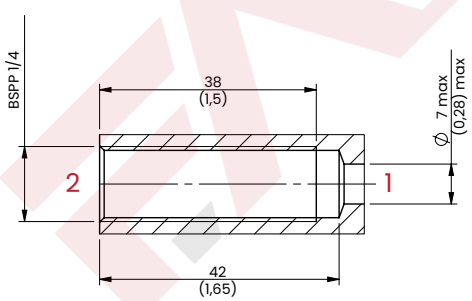

FC105

F2B

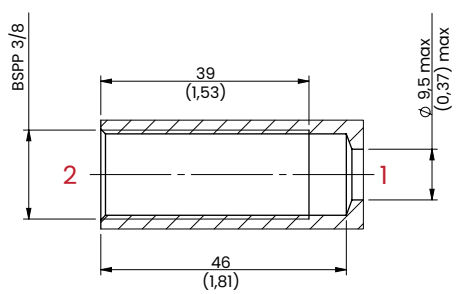

FC106

mm [Inches]

VU

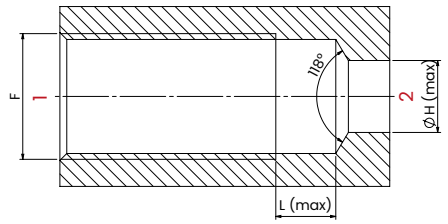

TECHNICAL CHARACTERISTICS

mm [Inches]

VUS

CAVITY CODE	VALVE CODE	TYPE	F ports	L (max)	H
FC107	FA3045	VUS1B	1/4 BSPP	3 [0,12]	7 [0,27]
FC108	FA3046	VUS2B	3/8 BSPP		9 [0,35]
FC109	FA3047	VUS3B	1/2 BSPP		12 [0,47]
FC110	FA3048	VUS4B	3/4 BSPP	4 [0,16]	16 [0,63]

VUC

FC119	FA3035	VUC0B	1/8 BSPP	3 [0,12]	5 [0,19]
FC111	FA3036	VUC1B	1/4 BSPP		7 [0,27]
FC112	FA3037	VUC2B	3/8 BSPP		9 [0,35]
FC113	FA3038	VUC3B	1/2 BSPP		12 [0,47]
FC114	FA3039	VUC4B	3/4 BSPP		18 [0,70]

VUD

FC120	FA3040	VUD0B	1/8 BSPP	3 [0,12]	5 [0,19]
FC107	FA3041	VUD1B	1/4 BSPP		7 [0,27]
FC108	FA3042	VUD2B	3/8 BSPP		9 [0,35]
FC109	FA3043	VUD3B	1/2 BSPP		12 [0,47]
FC110	FA3044	VUD4B	3/4 BSPP		18 [0,70]

UPDATE. October 2022 (v.01)

Via Guadiana n° 8/1, 42124 Reggio Emilia - ITALY | www.fluid-app.it | sales@fluid-app.it

SOLUTIONS FOR THE CUSTOMER.
CONSISTENT QUALITY.
QUICK FEEDBACK.
FLEXIBILITY.
GROWING TOGETHER.

www.fidrolic.ir

FOR INFORMATION
sales@fluid-app.it

CALL US
+39 0522 1722451

SEND US A WHATSAPP
+39 370 156 3348

LET'S TALK ON SOCIAL NETWORKS

WWW.FLUID-APP.IT
Via Guadiana n° 8/1 - 42124 Reggio Emilia - ITALY
Phone +39 0522 1722451
sales@fluid-app.it